SIEMENS

FC700A

Fire detection system

Hardware description
Modules

Fire & Security Products

Siemens Building Technologies

1 About this document 7

2 Safety regulations 9
2.1 Signal words and symbols 9
2.1.1 Signal words and their meaning 9
2.1.2 Symbols and their meaning 9
2.1.3 Classification and meaning of additional symbols 10
2.2 Safety-relevant working instructions 10

3 Hardware overview 12

4 Emergency operation 16
4.1 Emergency operation at line module E3M111 level 17
4.2 Emergency operation at line module E3M080 level 17
4.3 General requirements 17
4.4 Wiring principle 17

5 Principle of 24V wiring 19
5.1 Cascading principle 20

6 Ground fault monitoring (FM compliance) 21
6.1 Modules overview for FM compliant installations 21
6.2 Programming ground fault monitoring 22

7 E3C011 Battery charging module 23
7.1 Overview 23
7.2 Application 23
7.3 Key data 23
7.4 Important components 24
7.5 Programming switch ”S2” 24
7.6 Programming switch ”S3” 25
7.7 Floating charge voltage as a function of temperature 25
7.8 LED indicator block ”Battery-charger” 27
7.9 Connections 28

8 B2F020 Converter 29
8.1 Overview 29
8.2 Key data 29
8.3 Important components 30
8.4 Connections 31
8.5 Application limits 31

9 E3M080 Line module ”Collective” 32
9.1 Overview 32
9.2 Key data 32
9.3 Line voltage 33
9.4 Line termination element (Application see chapter 9.2) 33
9.5 Compatibility (detector <–> line type) 33
9.6 Important components 34
9.7 Programming switch ”S3” 34
9.8 Connections 35
9.9 Connection "Collective" SynoLINE600/-Ex 36

10 E3M111 Line module ”SynoLOOP” 37

10.1 Overview 37
10.2 Key data 37
10.3 Special functions 37
10.4 Important components 38
10.5 Programming switch ”S3” 38
10.6 Connections 39
10.7 Connection "Addressable" SynoLOOP 40
10.8 Connection "Conventional" SynoLINE300 41
10.9 Connection "Collective" SynoLINE600 42
10.10 Connection "Collective" SynoLINE600-Ex 43

11 E3I040 I-Bus/LON module 44
11.1 Overview 44
11.2 Application 44
11.3 Key data 44
11.4 Wiring principle 45
11.5 Important components 46
11.6 Programming switch ”S3” 46
11.7 Connections 47

12 E3I020 RS232 module 48
12.1 Overview 48
12.2 Application 48
12.3 Wiring principle 49
12.4 Key data 49
12.5 Connections 49
12.6 Important components 50

13 E3H020 C-Bus Gateway 51
13.1 Overview 51
13.2 Application C-Bus ISO1745 51
13.3 Key data 51
13.4 Wiring principle 52
13.5 Supply wiring principle 52
13.6 Important components 53
13.7 Programming switches ”S1” + ”S2” 54
13.8 Programming switch ”S3” 54
13.9 Programming switch ”S5” 54
13.10 Connections 55

14 E3L020 Control module ”I/O” 57
14.1 Overview 57
14.2 Key data 57
14.3 Important components 58
14.4 Programming switch ”S3” 58
14.5 Connections 59

15 E3L030 Control module VdS 60
15.1 Overview 60
15.2 Application 60
15.3 Key data 60
15.4 Important components 61
15.5 Programming switch ”S3” 62
15.6 Special functions 62
15.7 Connections 63

16 E3G050 Control module ”Contacts” 64

16.1 Overview 64
16.2 Key data 64
16.3 Important components 65
16.4 Programming switch ”S3” 65
16.5 Connections 66

17 E3G060 Control module ”Monitored” 67
17.1 Overview 67
17.2 Application 67
17.3 Key data 67
17.4 Important components 68
17.5 Programming switch ”S3” 68
17.6 Programming switches ”S7” & ”S8” 69
17.7 Connections 70

18 E3G070 Control module ”Universal” 71
18.1 Overview 71
18.2 Key data 71
18.3 Important components 72
18.4 Programming switch ”S3” 72
18.5 Connections 73

19 Z3B171 Relay module 74
19.1 Connections 74

20 B3Q700 Control terminal to FC/FT 75
20.1 Overview 75
20.2 Key data 75
20.3 Application 76
20.4 Functions 76
20.5 Mechanical design 77
20.6 Important components 78
20.7 Programming switch ’S5’ 79
20.8 Connections 79
20.9 Connectors 80

21 B3R051 Parallel indicator panel 81
21.1 Overview 81
21.2 Application 81
21.3 Key data 81
21.4 Wiring principle 82
21.5 Mechanical design 83
21.6 Important components 83
21.7 Programming switch ”S1” 84
21.8 Connections 84

22 K3R072 Mimic Display board 85
22.1 Overview 85
22.2 Application 85
22.3 Key data 85
22.4 Wiring principle 86
22.5 Mechanical design 86
22.6 Important components 87
22.7 Programming switch ”S1” 87
22.8 Connections 88

23 K3G060 Relay card 89

23.1 Overview 89
23.2 Key data 89
23.3 Wiring principle 89
23.4 Mechanical design 90
23.5 Important components 90
23.6 Connections 91

24 K3I050 Mimic Display converter 92
24.1 Overview 92
24.2 Application 92
24.3 Key data 92
24.4 Wiring principle 92
24.5 Mechanical design 93
24.6 Important components 93
24.7 Programming switch ”S3” 94
24.8 Connections 95

25 K3I110 LON I/O p.c.b. 96
25.1 Overview 96
25.2 Application 96
25.3 Key data 96
25.4 Wiring principle 96
25.5 Mechanical design 97
25.6 Important components 97
25.7 Programming switch ’S3’ 98
25.8 Connections 99

26 B3Q580 Floor repeater panel and B3Q590/B3Q595 Floor repeater panel with control functions 100
26.1 Overview 100
26.2 Application 100
26.3 Mechanical design 101
26.4 Important components B3Q580, B3Q590, B3Q595 101
26.5 Programming switch ”S3” 102
26.6 Message presentation 103
26.7 Country specific configuration data 104
26.8 Connections B3Q580 107
26.9 Connections B3Q590/B3Q595 107

1 About this document

Purpose

This document describes the function of hardware modules of the control unit FC700A. The consistent adherence to these instructions is a prerequisite for a safe application.

Scope

This document contains information for all modules FC700A, valid for all software versions.

Target groups

This product documentation and the work instructions are aimed at the following persons, who have a particular function and have the corresponding training and qualification.

Group of persons	Activity	Qualification
Project Manager	The project manager is responsible for the local project management. He co-ordinates the schedules of all groups of people working on a project as well as resources. He also continuously obtains the technical information required for project realization.	He has had the technical training appropriate to his function and the size of a project or the product line used in the project and has attended the training courses for project managers at the supplier's works.
Installation personnel	They install product, device or system components and subsequently carry out a general performance check.	Professional training in the field of building automation or electrical installations.
Commissioning personnel	The configuration of the products, devices or systems for specific customers at the place of installation. They check serviceability and officially clear the product, device or system for use by the operator / customer. They are also responsible for troubleshooting.	They have had the professional training appropriate to their function and to the commissioning of the products, systems and devices and have attended the technical training courses for commissioning personnel.
Product Specialist	He programs and parameterizes the product to comply with the requirements for specific countries and customers. He provides support in the solving of technical problems and supports all groups of people when product faults arise.	He has had technical training appropriate to his function and has attended the technical training courses for product specialists at the supply plant.

Reference documents

Information in	Document
007836	Planning
007827	Installation housing H26..../H28...
007832	Visualizer Customizing / End user (not yet available)
007835	Operating instructions
007828	Installation / Hardware Commissioning
007833	Maintenance instructions
007894	Templates for inscription stripes
007895	Operating platform for Tools

Work and operational safety

Before personnel begin work on the system they must have read and understood the related operating instructions, in particular chapter 2 "Safety regulations".

Disregard of the safety regulations

Before they are delivered, products are tested to ensure they function correctly when used properly. Siemens disclaims all liability for damage or injuries caused by the incorrect application of the instructions or disregard of warnings of danger contained in the documentation. This applies in particular to:

- Personal injuries or damage caused by improper use and incorrect use;
- Personal injuries or damage caused by disregarding safety instructions in the documentation or on the product;
- Personal injuries or damage caused by poor maintenance or a lack of maintenance.

Conventions

(...)	Additional information
..)	Notes
”.....” / ’.....’	Definitions of designations
->	Details see page ...., or document .....

Document identification

Place		Signification
Title page		– System names – Product type – Document purpose
Last page	bottom left bottom right	– The document number consists of: Language, number, index – Version date – Manual – Register

Modification index

Version	Date	Brief description
007831_a_en_--	03. 2004	First edition

2 Safety regulations

This chapter describes the danger levels and the relevant safety regulations applicable for the use of our products. Please read the work instructions as well as the chapter ”About this document” thoroughly before beginning any work.

2.1 Signal words and symbols

2.1.1 Signal words and their meaning

The danger level that is, the severity and probability of danger are indicated by the signal words listed below. Non-observance may lead to the consequences indicated:

DANGER
Imminent danger!
- May cause serious bodily injury or danger to life!

WARNING
Dangerous situation!
- May cause serious bodily injury or danger to life!

CAUTION
Possibly dangerous situation!
- May cause light injuries!

NOTE
Possibly harmful situation!
- May cause damage to the product or to objects in the immediate vicinity of the product!

2.1.2 Symbols and their meaning

The symbols listed below indicate the nature and origin of the danger.

Signal word	General danger

Signal word	Electrical voltage

Example for a danger warning

DANGER **External voltage**	Disconnect the module from power supply.

2.1.3 Classification and meaning of additional symbols

	Tips and information
	Refers to extremely important or critical decisions to be taken into account before continuing the work.

2.2 Safety-relevant working instructions

Country-specific standards
The products are developed and produced in compliance with the relevant international and European safety standards. Should additional country-specific, local safety standards or regulations concerning project planning, assembly, installation, operation and disposal of the product apply in the place of operation, then these standards or regulations must also be taken into account in addition to the safety regulations mentioned in the product documentation.

Electrical installations

DANGER **Work on electrical installations**	Any work on electrical installations may only be carried out by qualified electricians or instructed persons working under the guidance and supervision of a qualified electrician, in accordance with the electro technical regulations.

- Control units must be disconnected from the power supply during commissioning or maintenance work.
- Terminals with an external voltage supply must be provided with a sign ”DANGER - External voltage”.
- Mains leads to the control unit must be installed separately and provided with a clearly marked fuse.
- Earthing must be carried out in compliance with local safety regulations.
- When work is carried out in explosion-hazardous areas, the appropriate safety precautions must be taken.

Assembly, installation, commissioning and inspection work
- If any tools or accessories such as ladders are required, safe and suitable devices must be used.
- Prevention of spurious tripping of the remote transmission must be assured.
- Always inform the fire brigade before testing the remote transmission.
- The activation of fire control installations for test purposes must not cause damage to the system or parts thereof.
- Fire control installations must only be activated after the test has been completed and the system has been handed over to the customer.
- Third party systems or devices must only be activated in the presence of the responsible person.
- When work on management stations and system terminals are performed, the safety regulations of the connected sub-systems must be observed. This especially applies when switching-off system components.
- In the case of extinguishing systems, always use the ”General installation instructions” as a guideline. This guideline is available on request.

Testing the product operability

- Evacuate and cordon off extinguishing sector.
- Inform people about the possibility of occurring fog and noise.
- Inform people before testing of alarm devices; take the possibility of panic reactions into account.
- Inform the alarm and fault receiving stations connected to the system before running the tests.

Modifications to the system design and the product

Modifications to a system or to individual products may cause faults or malfunctioning. Please request written approval from us, and the relevant authorities concerning intended system modifications and system extensions.

Modules and spare parts

- Locally procured modules and spare parts must comply with the technical specifications laid down by the manufacturer. This compliance is always ensured for original spare parts supplied by us.
- Only use fuses with the specific fuse characteristics.
- Wrong battery types and improper battery exchange may introduce the danger of explosion. Only use the specified battery type or an equivalent battery type recommended by the manufacturer.
- Batteries require environmentally safe disposal. They must be handed in at the local collecting points.
- Please take into account that the extinguishing agent cylinders are pressurized and must be exchanged in compliance with the local safety regulations.

3 Hardware overview

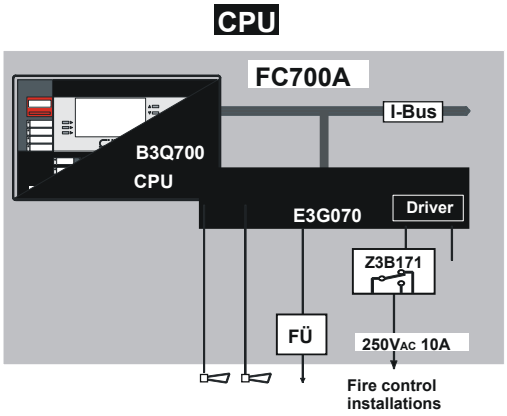

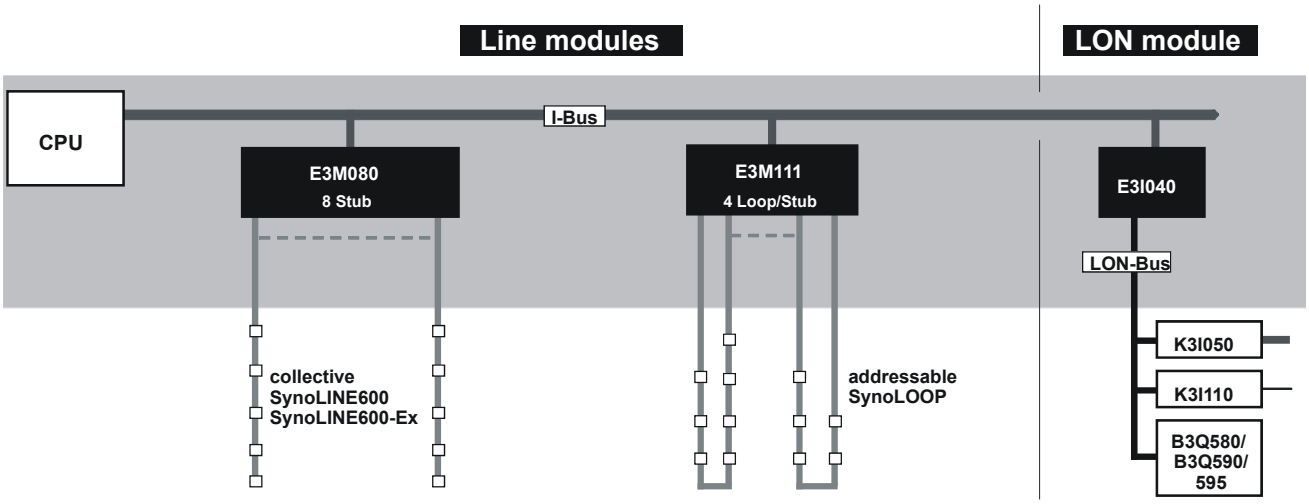

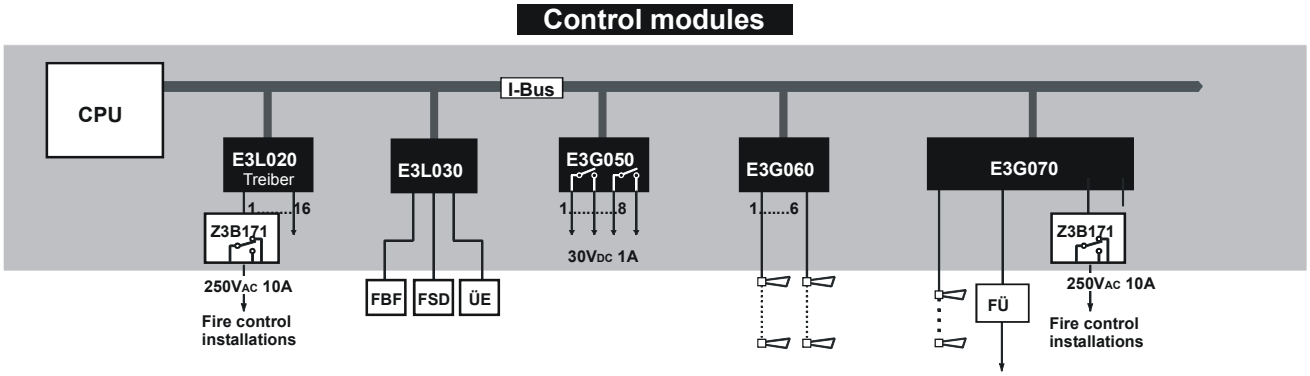

CPUs

Module	Specification
B3Q700	Used as control panel and CPU

Line modules

Module	Specification
E3M080	Line module collective
E3M111	Line module addressable

LON module

Module	Specification
E3I040	I-Bus/LON module

Control modules

Module	Specification
E3L020	Control module with 16 driver outputs
E3L030	Control module for the connection of the VdS periphery
E3G050	Control module with 8 volt-free contacts
E3G060	Control module with 6 monitored control lines
E3G070	Control module universale
Z3B171	Relay for fire control installations

Peripheral equipment

Module	Specification
FÜ	Remote transmission equipment
FBF	Fire department control panel (VdS ’D’)
FSD	Fire department key cabinet (VdS ’D’)
ÜE	Transmission device (VdS ’D’)

3rd party products not listed in this document, see chapter 15

Control terminal FT700A

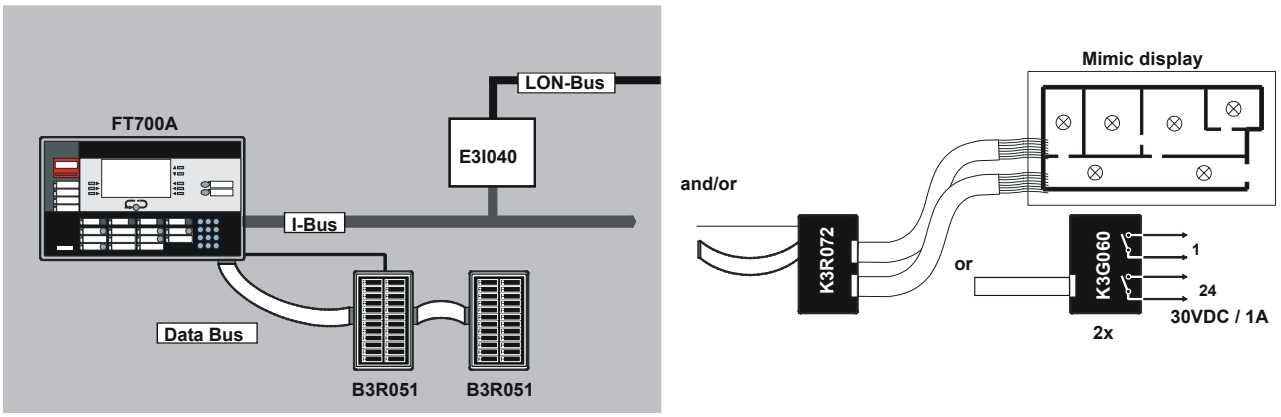

Floor repeater panel

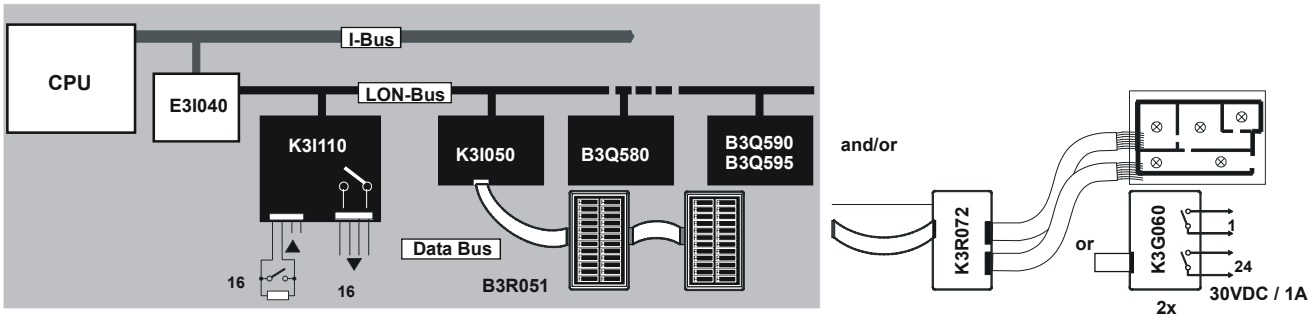

Printer

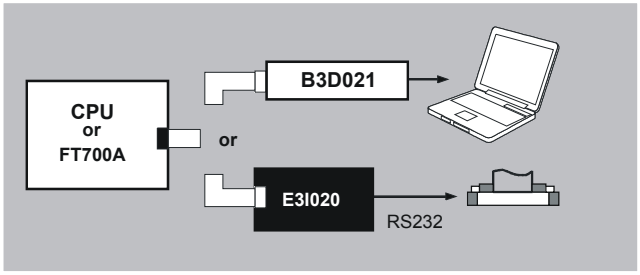

Gateway FG700A

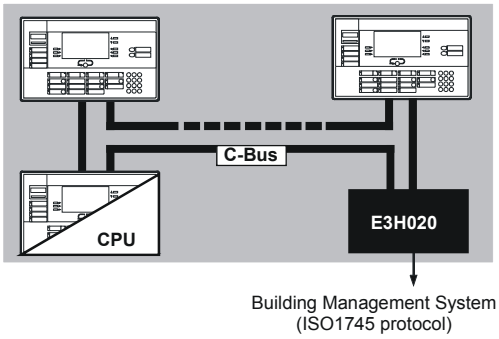

Power supply with accessories

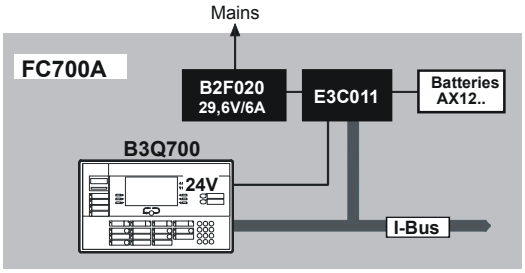

Control terminal and floor repeater panel

Module	Specification
B3Q700	Control panel
B3R051	Parallel indicator panel
K3R072	Mimic Display control module
K3G060	Relay card to Mimic Display board K3R072
K3I050	LON/Mimic Display converter
K3I110	LON I/O p.c.b
B3Q580	Floor repeater panel
B3Q590	Floor repeater panel with control functions with Nordic key
B3Q595	Floor repeater panel with control functions with KABA key

Printer

Module	Specification
E3I020	RS232 module

Gateway

Module	Specification
E3H020	C-Bus Gateway module

Power supply with accessories

Module	Specification
B2F020	Converter 115/230VAC → 29,6VDC / 6A as system voltage
E3C011	Battery-charging module

4 Emergency operation

An alarm, which occurs during system failure, is displayed at the control panel as a ”Collective alarm” (without location). The emergency operating circuit permanently integrated in the system achieves this.
Reduced alarm messages in emergency operation mode
- Collective alarm at B3Q700 (visual and buzzer)
- Alarm horns are activated and can be silenced at B3Q700 control console
- Remote alarm is activated via contact at the E3G070
- Response indicator at detector flashes (except with collective detectors)

Emergency operation circuit at C-Bus level (external)
- Comprises the functions ”Collective alarm” and ”Silence alarm horns”
- Requires 3 additional wires between FC700A and FT700A
- The line ’Emergency operation circuit fire alarm’ is electrically monitored
- Function ’Monitoring’ must, if not used, be set to inactive (SWE700A)
- Emergency operation circuit between the individual stations is designed for specific systems

Emergency operation circuit at I-Bus level (internal)
- Comprises the functions ”Emergency alarm” and ”Silence alarm horns” at the various I-Bus modules
- Integrated in the I-Bus flat cable, for this purpose 2 lines lead via all modules to the FC700A (B3Q700)

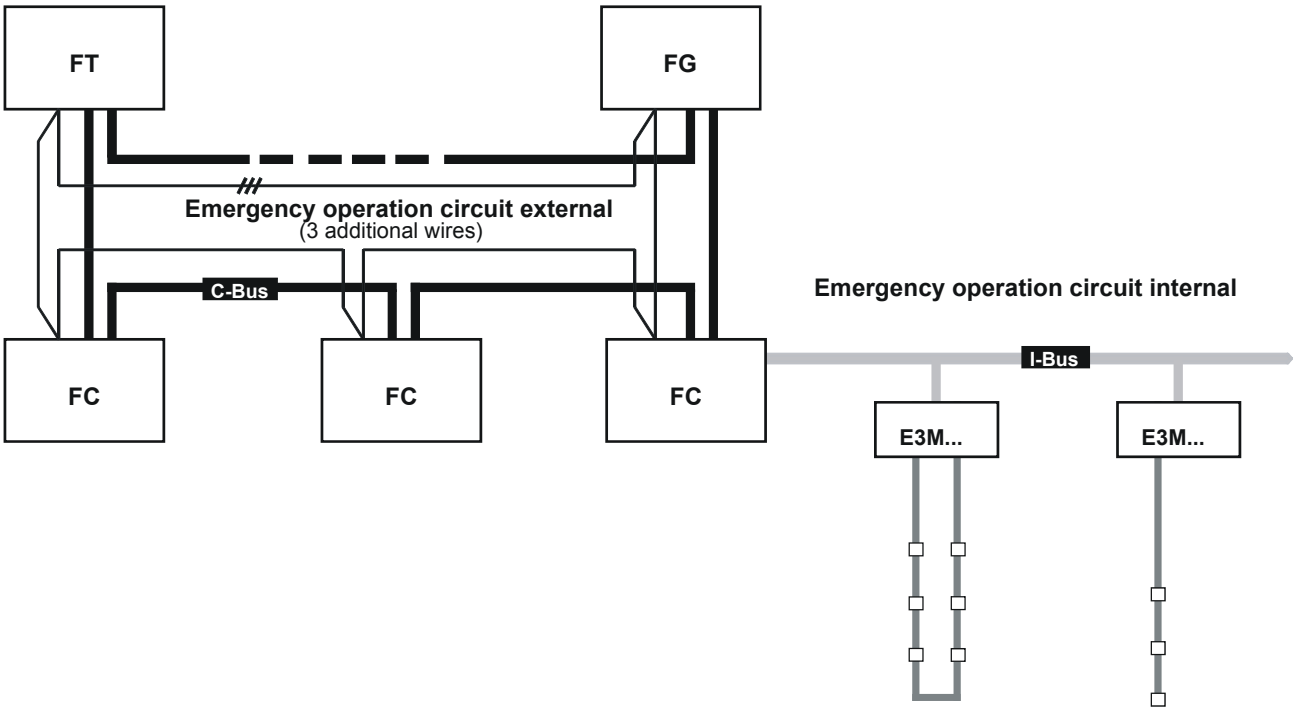

4.1 Emergency operation at line module E3M111 level

- Alarm evaluation in ”Emergency operation” mode via **Emergency operation processor** and ”Emergency operation” in the detector
- With emergency alarm a ”Collective alarm” is given at the B3Q700 **with** the response indicator in the detector flashing
- With line short circuit **and** malfunction of the line processor **no** ”Emergency alarm” is given

4.2 Emergency operation at line module E3M080 level

- Alarm evaluation with ”Emergency operation” via **hardware comparators**
- With emergency alarm the ”Collective alarm” is given at the B3Q700 **without** the response indicator at the detector flashing
- Selectable Function ”Short circuit = Alarm” also fulfilled with emergency alarm

4.3 General requirements

At least one control console per system must comply with standard EN54, i.e. must have Emergency operation capability and Emergency power supply.

Emergency power supply
- This consists of a second supply circuit to stations located elsewhere
- For this purpose the B3Q700 has 2 de-coupled supply inputs

4.4 Wiring principle

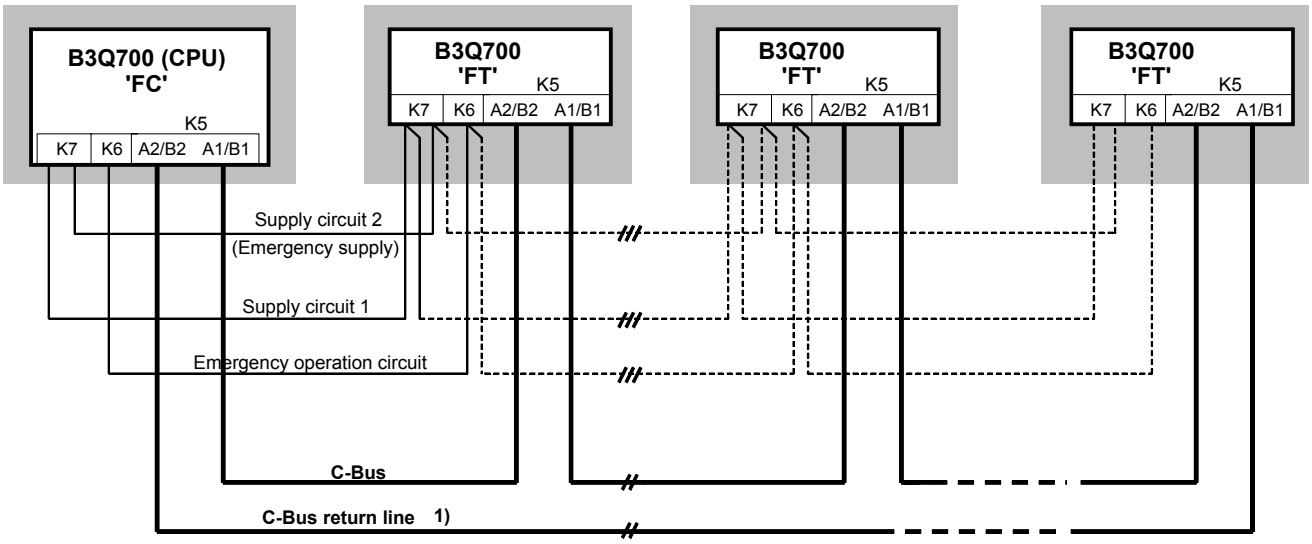

1) C-Bus loop line = max. 1000m (at G51 ø 0.6mm) incl. return line or max. 1400m at G51 ø 0.8mm

Two requirements must be met for control consoles located elsewhere. At least **one** control console must comply with standard EN54 (i.e. have emergency operation capability and emergency supply).
EN54 requirements:

Communication as loop line	(= C-Bus designed as loop line)
Operation also in emergency mode	(= 3 additional wires for emergency operation between CPU and control consoles)
Second de-coupled 24V supply	(= 3 additional wires if there is no autonomous power supply)

The **number of wires** in the connection cable depends on the application:
a) Are control consoles supplied from the control unit with 24V?
b) Is an emergency power supply also provided according to EN54?
c) Is the emergency operation circuit also provided?

Application	**C-Bus**	**24V supply**	**Emergency supply**	**Emergency operation circuit**	**Number of wires**
24V supply from control unit **Complies with EN54**	X (2 wires)	X (3 wires)	X (2 wires)	X (3 wires)	10
24V supply from control unit without emergency operation / emergency power supply	X (2 wires)	X (3 wires)	-	-	5

Note:
- Emergency operation circuit also required between other CPUs
- Emergency operation circuit and the emergency power supply are not laid out as a loop line
- Route emergency power supply in a separate cable or in the C-Bus cable feedback

5 Principle of 24V wiring

Standard power supply 'FC/FT'

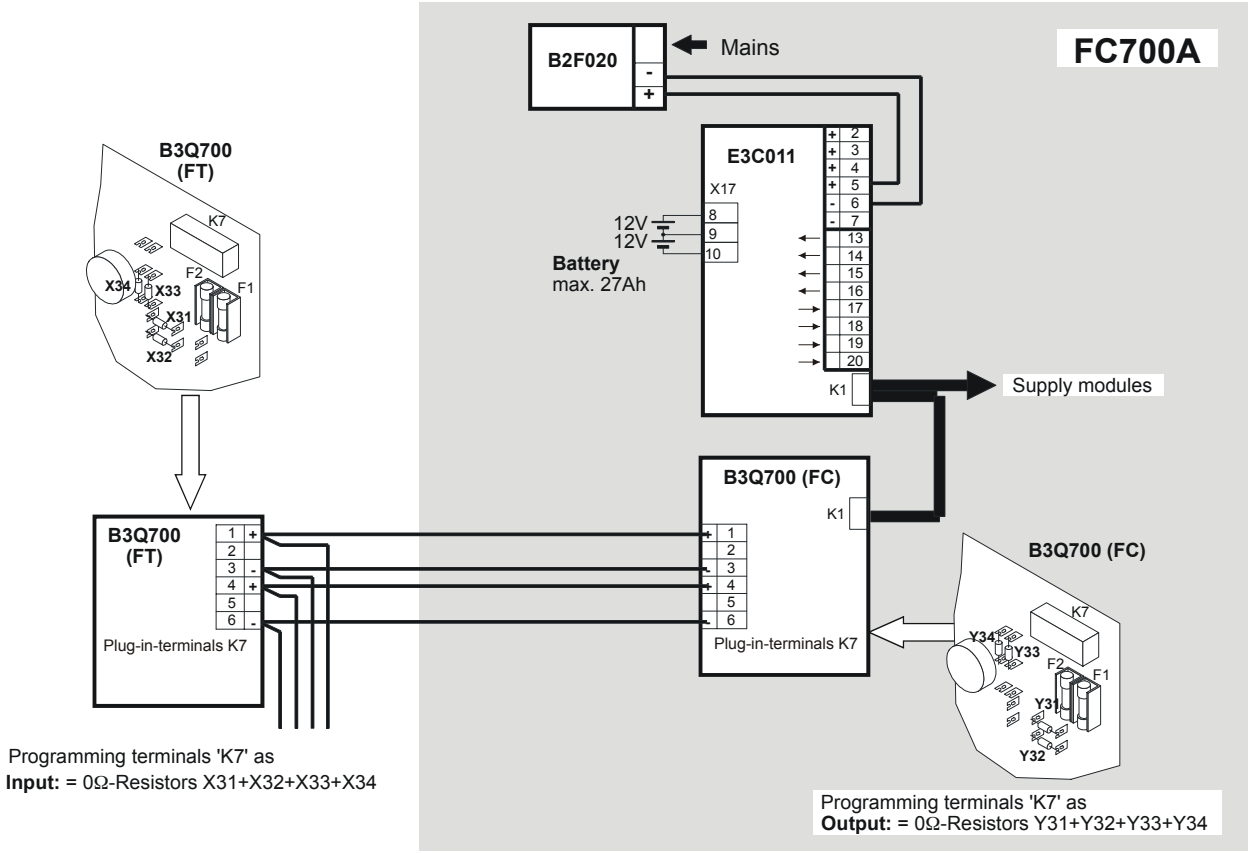

5.1 Cascading principle

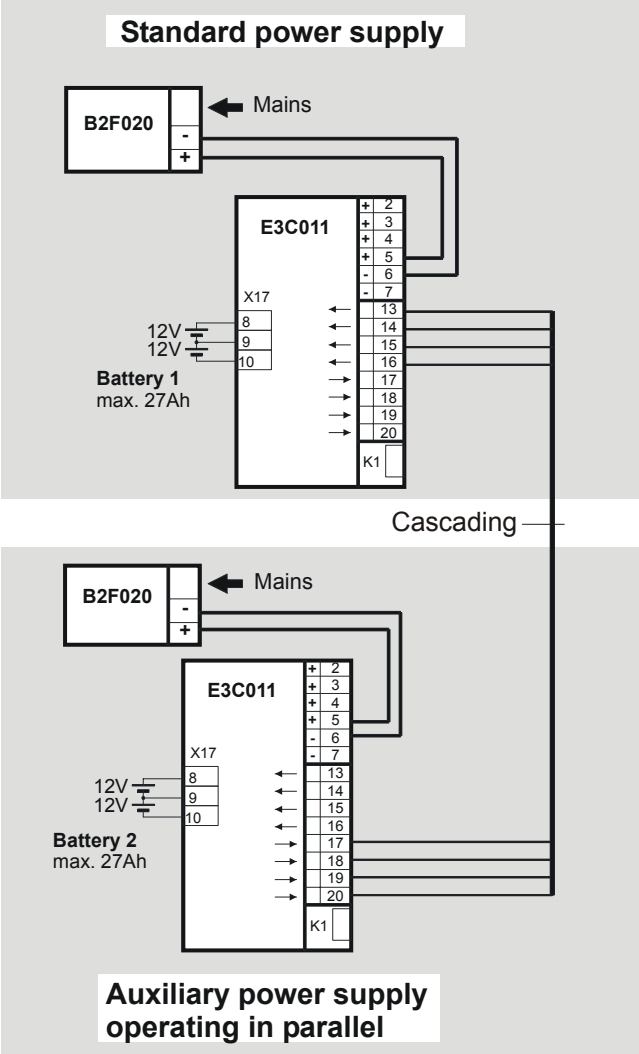

6 Ground fault monitoring (FM compliance)

Customer sites covered by the American Factory Mutual (FM) insurance company have special requirements to their fire panels. The basic FM requirement is to safely monitor and detect ground faults, of all lines leaving the panel.
The FC700A has been technically adjusted to fulfil those requirements.
For FM installations, adhere the FM Approval mark to the control unit housing next to the type label.
All modules are delivered pre-set with today's functionality, so that when setting up FM installations only, minor adjustments are necessary on some of the modules according to the following description.

6.1 Modules overview for FM compliant installations

Modules with part numbers are suitable for FM installations.

	Module	Part number	Jumper setting
B3Q700	Control console	A5Q00004759	yes
E3G070	Control module "universal"	546661	yes
E3I040	I-Bus/LON module	499310	yes
K3I110	LON-I/O p.c.b.	528854	yes
E3L020	Control module "I/O"	546645	no
E3G060	Control module "monitored"	542539	no
E3H020	C-Bus Gateway	546658	no

Remarks
- With an E3L030 board installed, the system is not FM compliant.
- Please verify part of used modules and check jumper settings as described in the following scheme.

6.2 Programming ground fault monitoring

1) Ground fault monitoring 'control unit' (jumper 'X60') may only be active **once** within an electrically connected C-Bus network. (preferably always in the station with C-Bus address 1)

2) The C-Bus potential shall only be allocated to system ground in **one station** (jumper 'X30'). (preferably always in the station with C-Bus address 1)

Galvanically isolated circuits

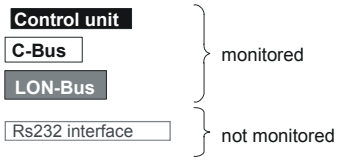

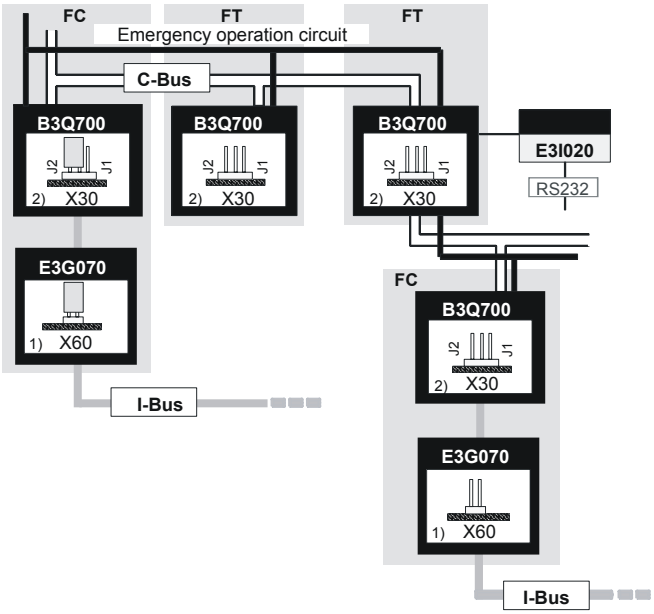

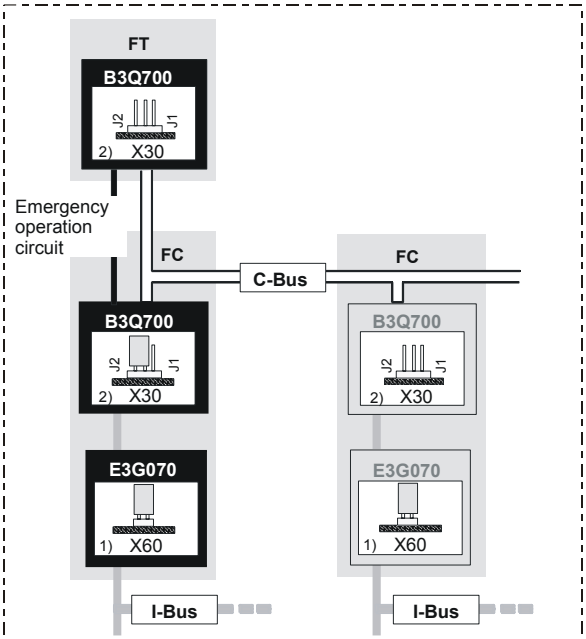

Stations which have their own power supply and which are **not** linked together by the emergency operation circuit are regarded as separate circuits with their own ground fault monitoring.
The jumper 'X60' must be inserted **at each station**.

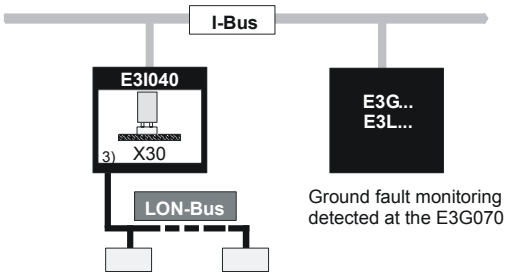

Ground fault monitoring active, detected at the E3G070

3) The jumper **must** be inserted at each LON-Bus module so that the ground faultmonitoring 'LON-Bus' is active.

- Outgoing lines which are activated by galvanically isolated contacts cannot influence the control unit in the event of ground fault, and therefore, they don't nead to be monitered!

- If a connection is security-relevant, and an **RS232** interface is being used, be sure to make an optical link.

- If galvanically isolated relays are used, make sure that the 3rd party system takes over the ground fault monitoring function.

- **Ground fault monitoring** reacts if the resistance is:
a) ≤ 4kΩ from positive potential to ground, or
b) ≤ 16kΩ from negative potential (system ground) to ground

7 E3C011 Battery charging module

7.1 Overview

- For the charging and monitoring of the 24V emergency power battery
- I-Bus module with processor
- Designed for the AC/DC converter B2F020
- Temperature compensation via external temperature sensor
- Choice of functions (via maintenance PC)

		factory setting:
– emergency power available	yes/no	yes
– battery available	yes/no	yes
– charging	yes/no	yes
– presence monitoring	yes/no	yes
– symmetry monitoring	yes/no	yes
– automatic battery load test	yes/no	yes
– fault signal delay upon mains failure	1...30 min.	

- Card format 100mm x 200mm

7.2 Application

– As battery charger control unit
– For auxiliary batteries

7.3 Key data

Input voltage	29.6VDC ±2% (B2F020)
Battery	2 x 12V / 6...27Ah, lead battery (full battery recharging up to 80% within 24h)
Charging characteristics	Can be adjusted to 16 makes of battery using programming switch ”S2”
Charging current	max: 1.7A (current limitation)
Battery monitoring	Battery presence test every 55sec
Symmetry monitoring	Asymmetry >1V = Fault
Battery test	Automatic battery load test (3A for 10sec once every 23h), Can also be activated manually via B3Q700
EMI-protected battery line	no
Low discharge protection	Battery operation switches off when voltage is 21.0V
Quiescent current	20mA when on emergency power operation 40mA when on mains operation without battery charging

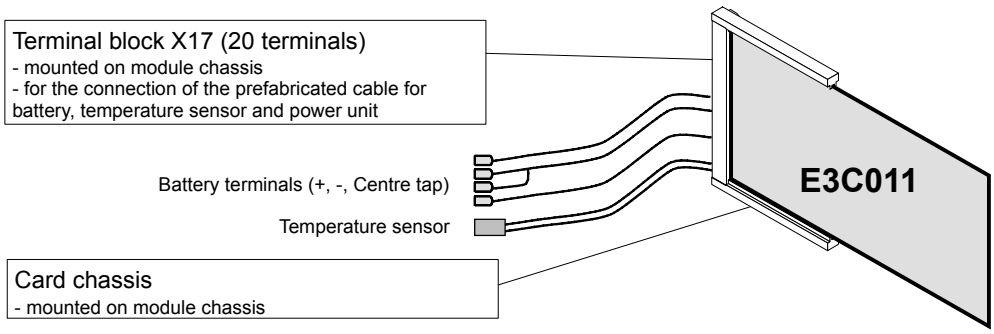

7.4 Important components

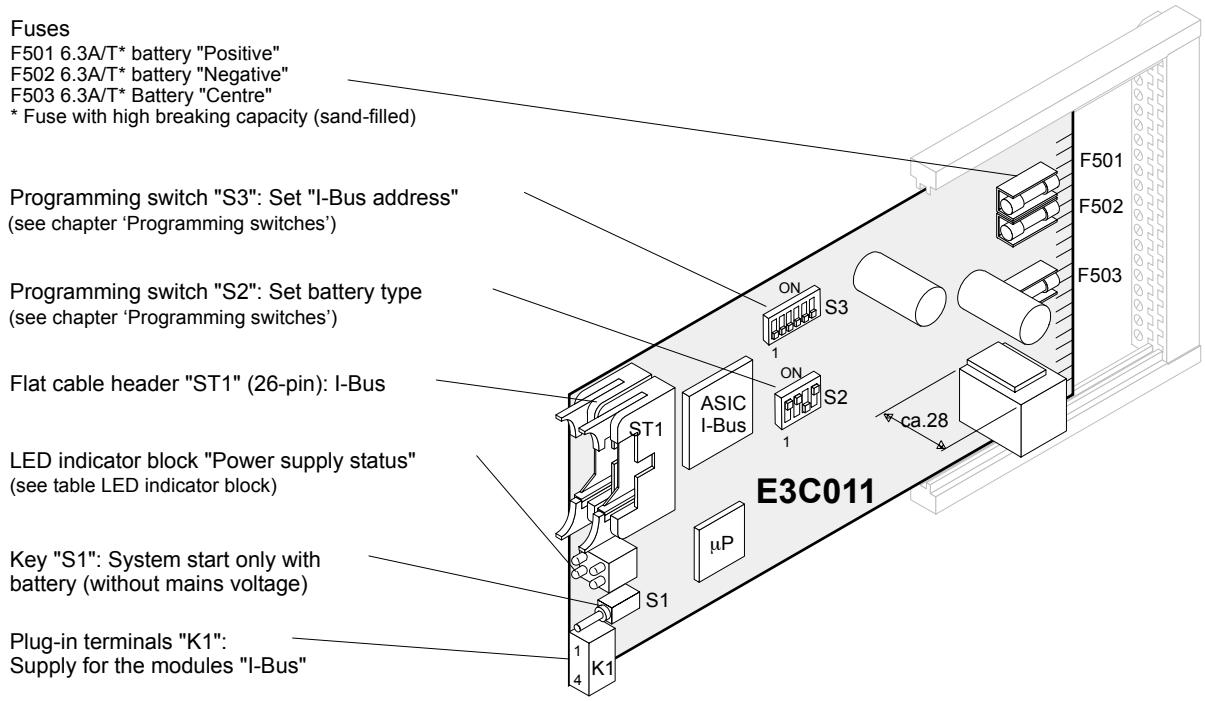

7.5 Programming switch "S2"

To set temperature compensation according to information from the various battery manufacturers

Possible battery variants			Programming switch S2			
Var.	Battery manufacturer	Battery model	S2-1	S2-2	S2-3	S2-4
0			off	off	off	off
1			on	off	off	off
2	Varta Shin-Kobe (Hitachi) Kobe PSD (Power Storage Germany)	CF 12-24 (VM 1224) HP..-12 HP..-12	off	on	off	off
3	Genesis	G12V120W15	on	on	off	off
4	Sunrise Panasonic	LCL 12V24S LCL 12V..P	off	off	on	off
5	Phoenix (Korea)	FNC 12..0	on	off	on	off
6	Yuasa	NP..-12B	off	on	on	off
7	Sonnenschein Dryfit	A212/..G5	on	on	on	off
8	Power-Sonic	PS12..0	off	off	off	on
9	Hagen Drysafe	HDS-12..0NB	on	off	off	on
10	Sonnenschein Dryfit	A512/..G5	off	on	off	on
11	ALARMCOM (FIAMM)	FG...	on	on	off	on
12			off	off	on	on
13			on	off	on	on
14			off	on	on	on
15			on	on	on	on

"S2" is set to variant 11 (ALARMCOM) at the factory

➔ Floating charge voltage as a function of temperature, or for diagrams of the various types of battery see page 25

7.6 Programming switch ”S3”

To set I-Bus address. Each element (module) connected to the I-Bus must have an individual address (number). This is set on programming switch ”S3”. Maximum 16 I-Bus users.

Function / I-Bus address		**Programming switch S3**					
No.		S3-1	S3-2	S3-3	S3-4	S3-5	S3-6
0	Module out of commission (unused)	off	off	off	off	off	off
1	I-Bus user number 1	on	off	off	off	off	off
2	2	off	on	off	off	off	off
3	3	on	on	off	off	off	off
4	4	off	off	on	off	off	off
5	5	on	off	on	off	off	off
6	6	off	on	on	off	off	off
7	7	on	on	on	off	off	off
8	8	off	off	off	on	off	off
9	9	on	off	off	on	off	off
10	10	off	on	off	on	off	off
11	11	on	on	off	on	off	off
12	12	off	off	on	on	off	off
13	13	on	off	on	on	off	off
14	14	off	on	on	on	off	off
15	15	on	on	on	on	off	off
16	16	off	off	off	off	on	off

”S3-1...6” are set to ”off” at the factory

The I-Bus address setting is given as default by the tool (SWE700A) as address 16, therefore the programming switch 'S3' of the E3C011 must be set accordingly.

7.7 Floating charge voltage as a function of temperature

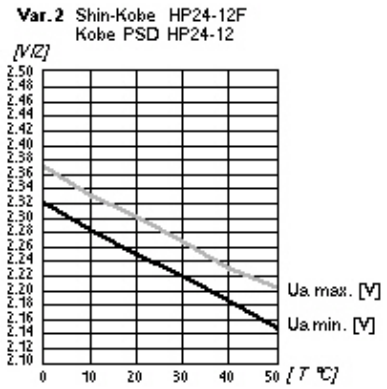

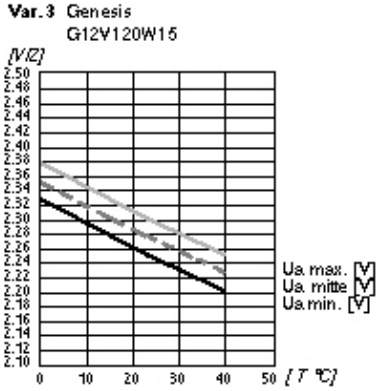

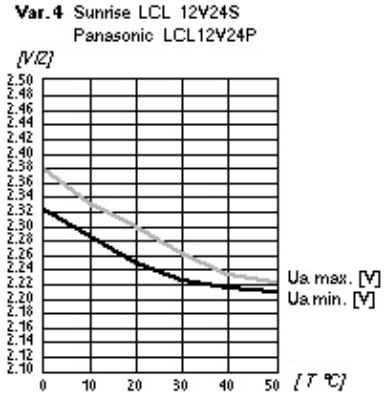

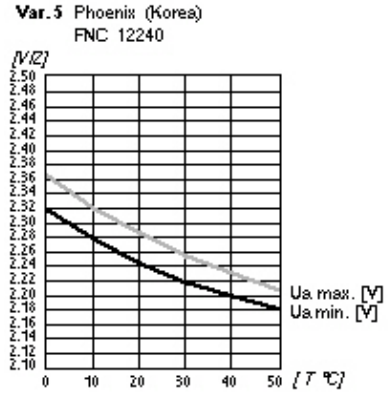

Var. 6 Yuasa
NP24-12B

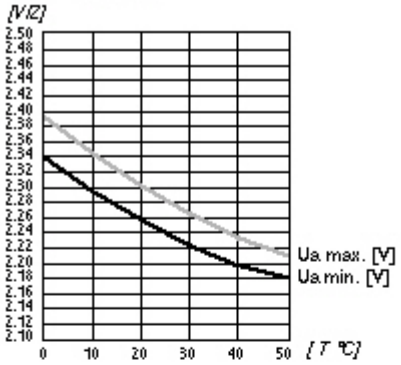

Var. 7 Sonnenschein Dryfit
A212/24G5

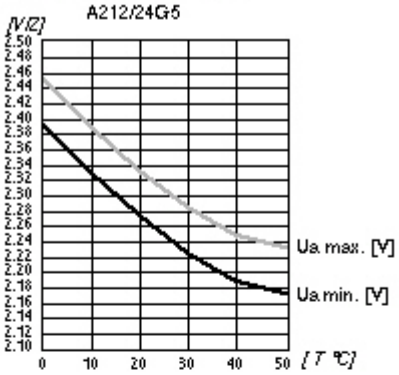

Var. 8 Power-Sonic
PS12260

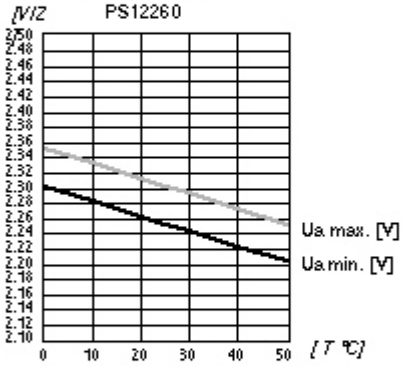

Var. 9 Hagen Drysafe
HDS-12260NB

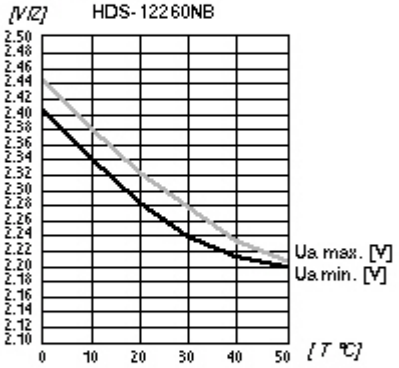

Var. 10 Sonnenschein Dryfit
A512/25G5

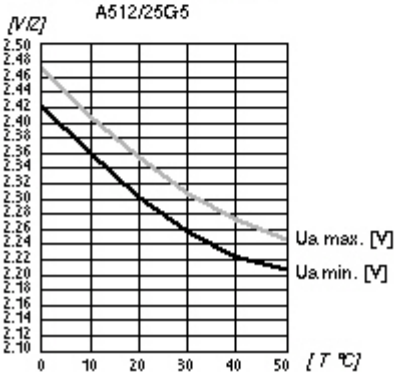

Var. 11 ALARM COM
(FIAMM)

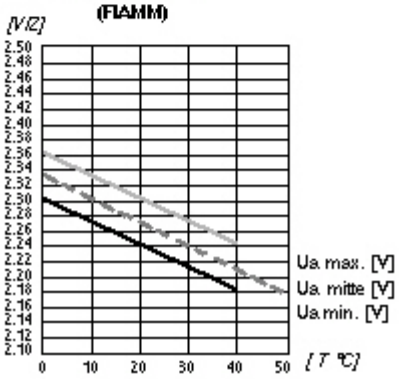

7.8 LED indicator block ”Battery-charger”

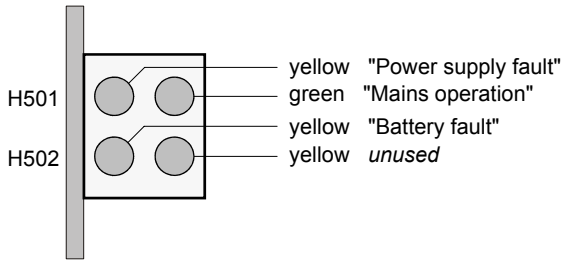

Indicators vary in meaning according to application:

a) Battery operation *and* symmetry monitoring

LED ”Power supply fault” – Input voltage > 31.0V → power unit malfunction – Battery voltage > 29.5V or < 25V → charger malfunction – Charger malfunction – Charger shut down (via software function) – Temperature sensor open line / short circuit – Temperature sensor measures > 55°C EEPROM check sum error
LED ”Power on” Input voltage > 28.5V
LED ”Battery fault” – Battery voltage <23V – Asymmetry >1.0V or fuse F503 blown – Possibly cell short circuit – Open line to battery or fuse F501 / F502 blown – Automatic test to indicate battery presence negative – Automatic battery load test negative

b) Battery operation *without* symmetry monitoring

LED ”Power supply fault” – Input voltage > 31.0V → power unit malfunction – Battery voltage > 29.5V or < 25V → charger malfunction – Charger malfunction – Charger shut down (via software function) – Temperature sensor open line / short circuit – Temperature sensor measures > 55°C – EEPROM check sum error
LED ”Power on” – Input voltage > 28.5V
LED ”Battery fault” – Battery voltage <23V – Open line to battery or fuse F501 / F502 blown – Automatic test to indicate battery presence negative – Automatic battery load test negative

c) Operation with external voltage (instead of battery)

LED ”Power supply fault” – Input voltage > 31.0V → power unit malfunction – EEPROM check sum error
LED ”Power on” – Input voltage > 28.5V
LED ”Battery fault” – Battery voltage or external voltage < 23V or > 31.0V – Automatic presence test (external voltage) negative or fuse F501 / F502 blown

d) Operation without battery or external voltage

LED ”Power supply fault” – Input voltage > 31.0V → power unit malfunction – EEPROM check sum error
LED ”Power on” – Input voltage > 28.5V
LED ”Battery fault” – no function

7.9 Connections

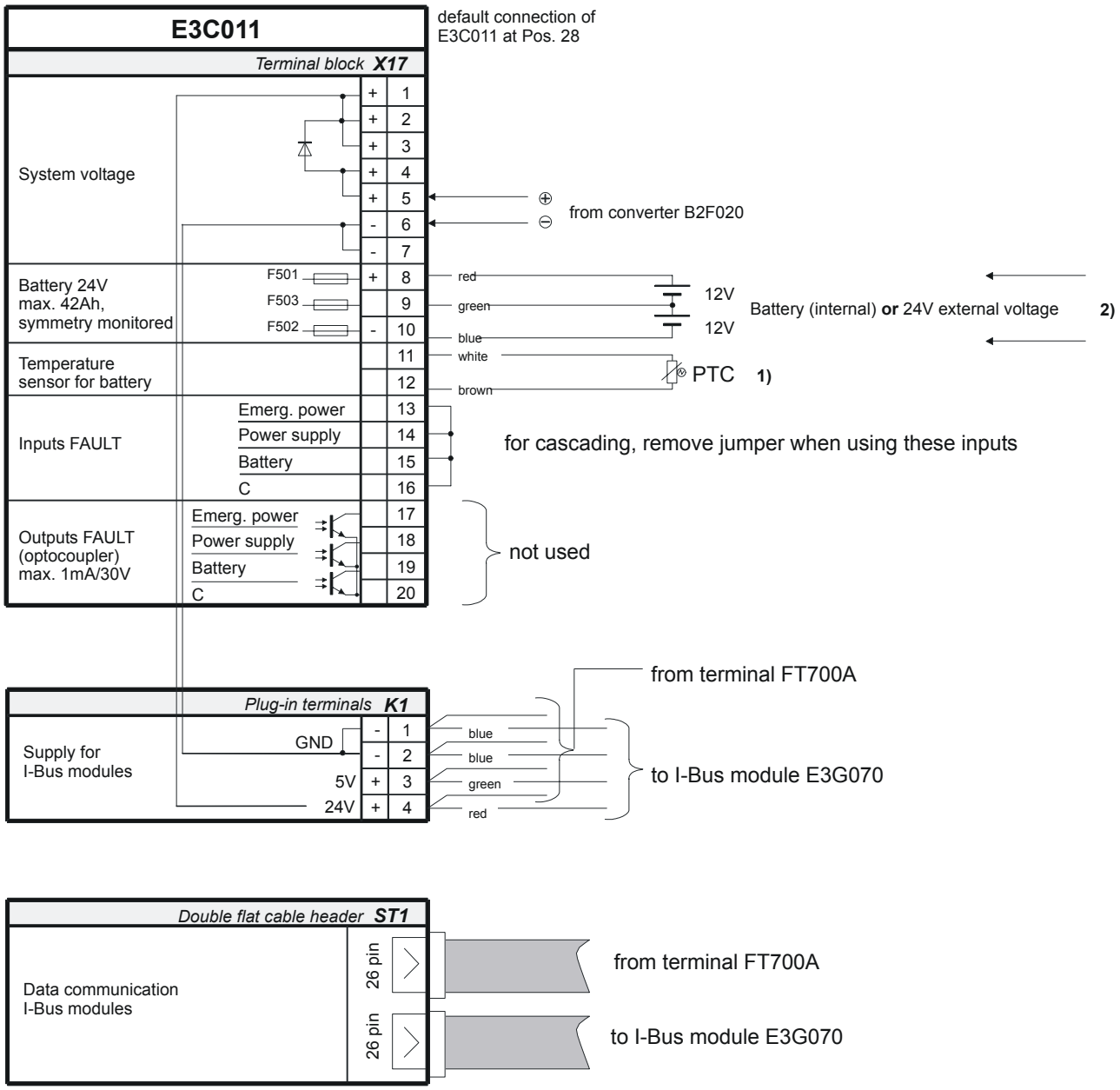

1) PTC is always required including for operation "with external voltage" or "without battery".
2) Function "24V external voltage" or "without battery" can be programmed via maintenance PC
With the function "external voltage", battery presence monitoring can be programmed as "active"
(i.e. the external voltage is monitored).

8 B2F020 Converter

8.1 Overview

- Converts the **Mains** voltage to the **system** voltage
- Consistent with the battery-charging module E3C011
- Designed for an output current of 6A at 29,6VDC
- Requires no special cooling
- Built-in thermal fuse
- Current limited
- Short circuit proof
- Parallel operation
- Switches on primary side
- With metal shielding
- Dimensions 200 x 100 x 40

Power supply general
The power supply for fire control unit FC700A consists of the following three components:
– Converter B2F020
– Battery-charging module E3C011
– Emergency power battery, capacity according to quiescent current and the required mains autonomy; see document no. 007836 ”Emergency power calculation”

8.2 Key data

Mains voltage	115 / 230VAC +10%/-15% 50...60Hz
Power consumption	40...220VA
Mains fuse	3.15A/T, permanently integrated, not exchangeable on site
Output current	max. 6A continuous (limited)
Output voltage	29.6VDC ±2%
Residual ripple	max. 300mVpp
Quiescent current with battery operation	0mA
Temperature range	0...+70°C without ventilator, automatic switch-off at >90°C
Standard	CE / prEN54-4

8.3 Important components

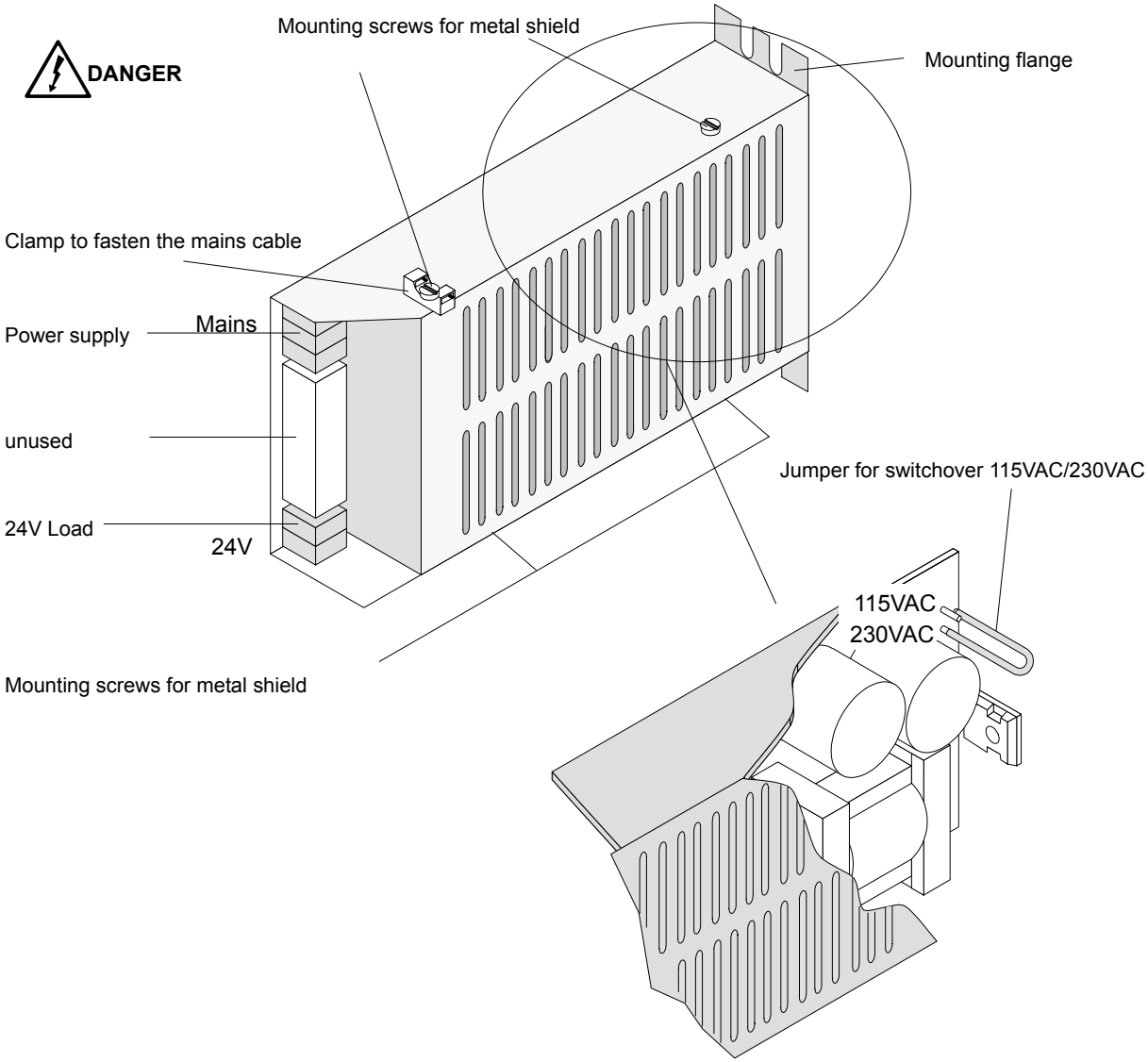

Note:
➔ Check mains voltage setting before commissioning
The converter is supplied by the factory at 230VAC
To switchover to 115VAC → remove metal shield (remove screws) and then plug in jumper at the ”115VAC” pin

8.4 Connections

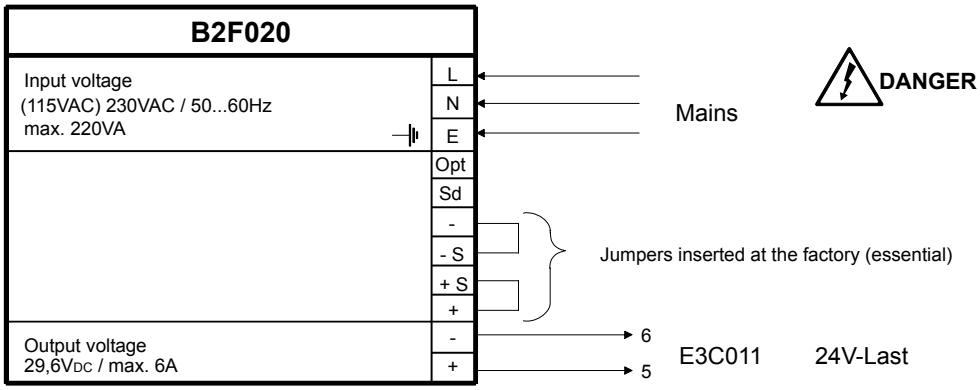

8.5 Application limits

B2F020 as ”Standard power supply”

- As basic emergency power supply.

B2F020 as ”Auxiliary power supply”

- In parallel operation with the standard power supply.
  e.g. if long duration of emergency operation is required.

Note

– B2F020 and E3C011 must be installed in the same housing (or in housings mounted solidly together)
– The required emergency power supply battery capacity (number of batteries) must be calculated based on the individual quiescent current (see document no. 007836)
– Batteries larger than 27Ah per E3C011 are impossible if the recharging of a battery is to be done according to regulations (to 80% capacity within 24h)
– See page 20 for interconnection principle

9 E3M080 Line module ”Collective”

9.1 Overview

- Line module for **collective detectors** (digital comparator)
- I-Bus module with common line processor for all **8 lines**
- 2 line types available (programmable via SWE700A)
- Line termination depending on programmable line type
- Short circuit can be evaluated as fault or alarm per module (Programming switch ‘S4’)
- Line inputs protected against over voltage
- Card format 100mm x 200mm
- I-Bus address is set at programming switch ’S3’

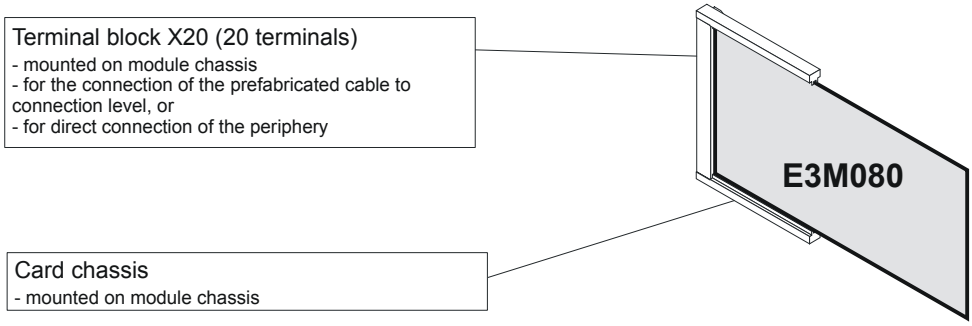

9.2 Key data

Line type	Type 1	Type 11
Connectable detector series	See chapter 0 ’Compatibility’	
Number of detectors per line	max. 25	
Number of wires	2	
Twisted cable	recommended	
Line resistance	max. 250Ω	max. 150Ω
Line capacitance	max. 4µF	
Line termination element	EOL22 (Ex)	Transzorb 20V
Line voltage	See chapter 9.3 “Line voltage”	
Alarm current limit	45 - 60mA during AI pulse max. 4,5mA during AI ”dark” phase	
Line voltage limit	26,5 ... 27,7V	
Quiescent line current	max. 4,5mA	
Reset time	3 sec.	
Turn-on alarm delay	4.6 sec.	
Fault delay	15 sec.	
Module quiescent current at 24V	85mA	

9.3 Line voltage

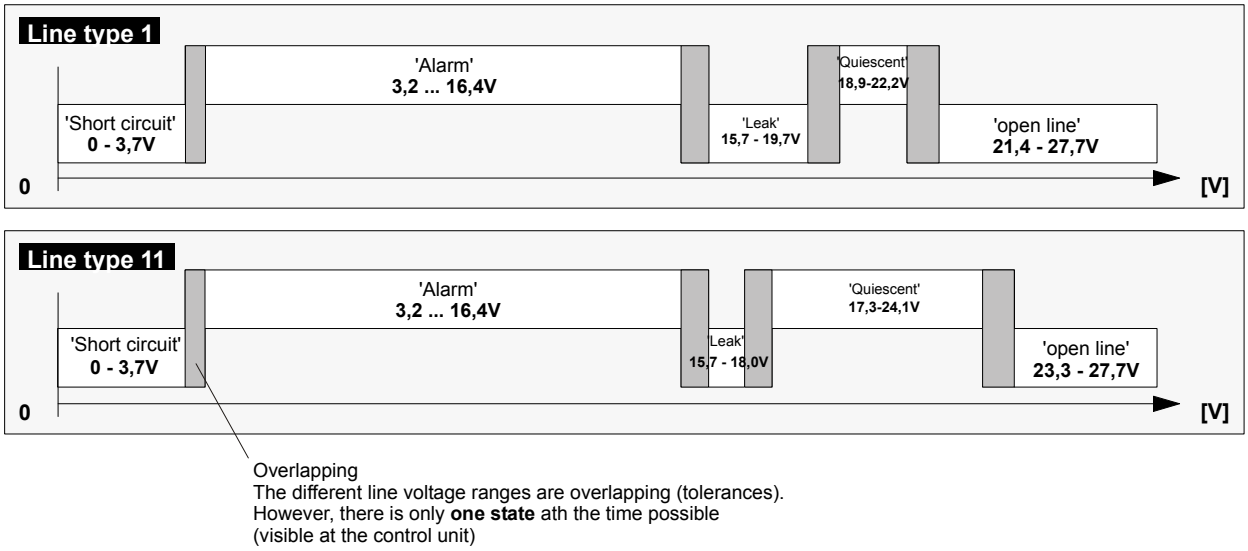

9.4 Line termination element (Application see chapter 9.2)

Transzorb	(Part number 460 051)	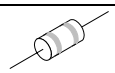
EOL22 (Ex)	(Part number 516 222)	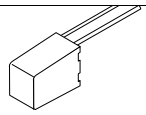

9.5 Compatibility (detector <–> line type)

Line type 11	Line termination with transzorb 20V	**Synova™ detectors:** OP620C, HI62xC, DM110x, DC1192 **Ex detectors (without restrictions)** used via DC1192 with SB3: DO1101-Ex, DT110x-Ex
Line type 1	Line termination with EOL22 (Ex)	**Special detectors:** DLO1191, (with mixed lines also OP620C, HI62xC, DM110x, DC1192)

9.6 Important components

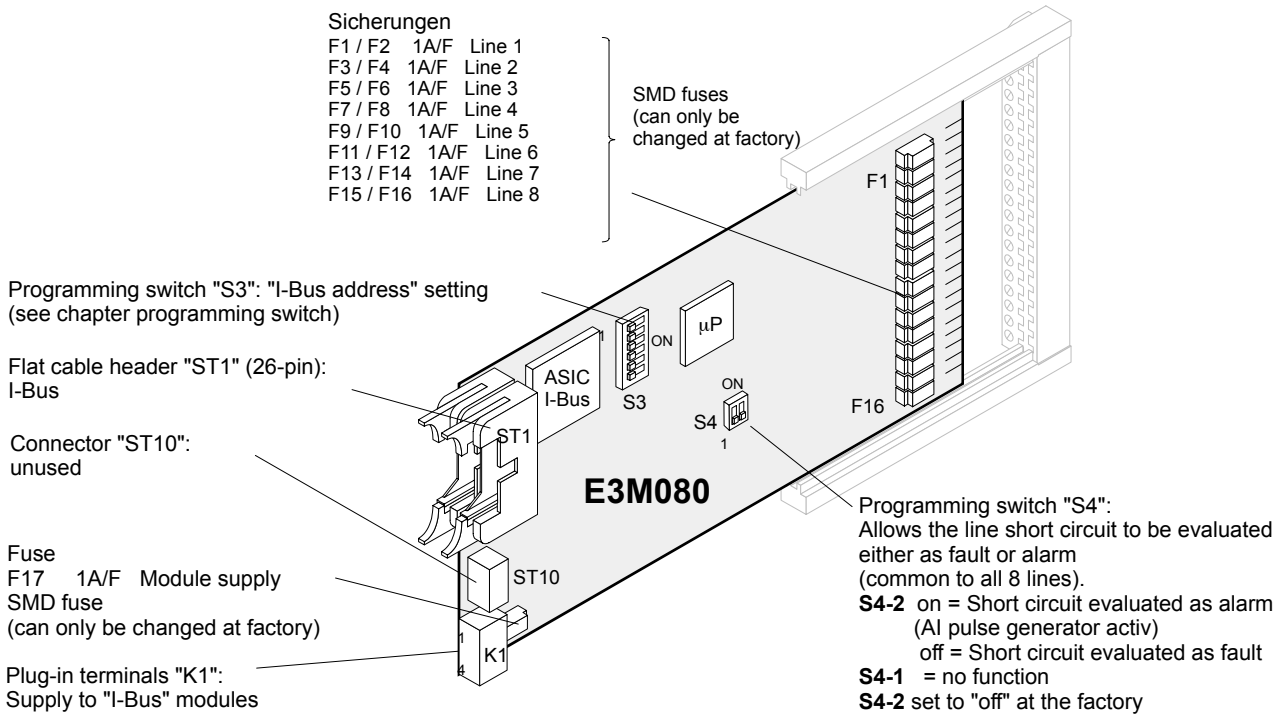

9.7 Programming switch ”S3”

To set I-Bus address. Each element (module) connected to the I-Bus must have an individual address (number). This is set on programming switch ”S3”. Maximum 16 I-Bus devices.

Function / I-Bus address		**Programming switch S3**					
Nr.		S3-1	S3-2	S3-3	S3-4	S3-5	S3-6
0	Module out of commission (unused)	off	off	off	off	off	off
1	I-Bus user number 1	**on**	off	off	off	off	off
2	2	off	**on**	off	off	off	off
3	3	**on**	**on**	off	off	off	off
4	4	off	off	**on**	off	off	off
5	5	**on**	off	**on**	off	off	off
6	6	off	**on**	**on**	off	off	off
7	7	**on**	**on**	**on**	off	off	off
8	8	off	off	off	**on**	off	off
9	9	**on**	off	off	**on**	off	off
10	10	off	**on**	off	**on**	off	off
11	11	**on**	**on**	off	**on**	off	off
12	12	off	off	**on**	**on**	off	off
13	13	**on**	off	**on**	**on**	off	off
14	14	off	**on**	**on**	**on**	off	off
15	15	**on**	**on**	**on**	**on**	off	off
16	16	off	off	off	off	**on**	off

”S3-1...6” are set to ”off” at the factory

9.8 Connections

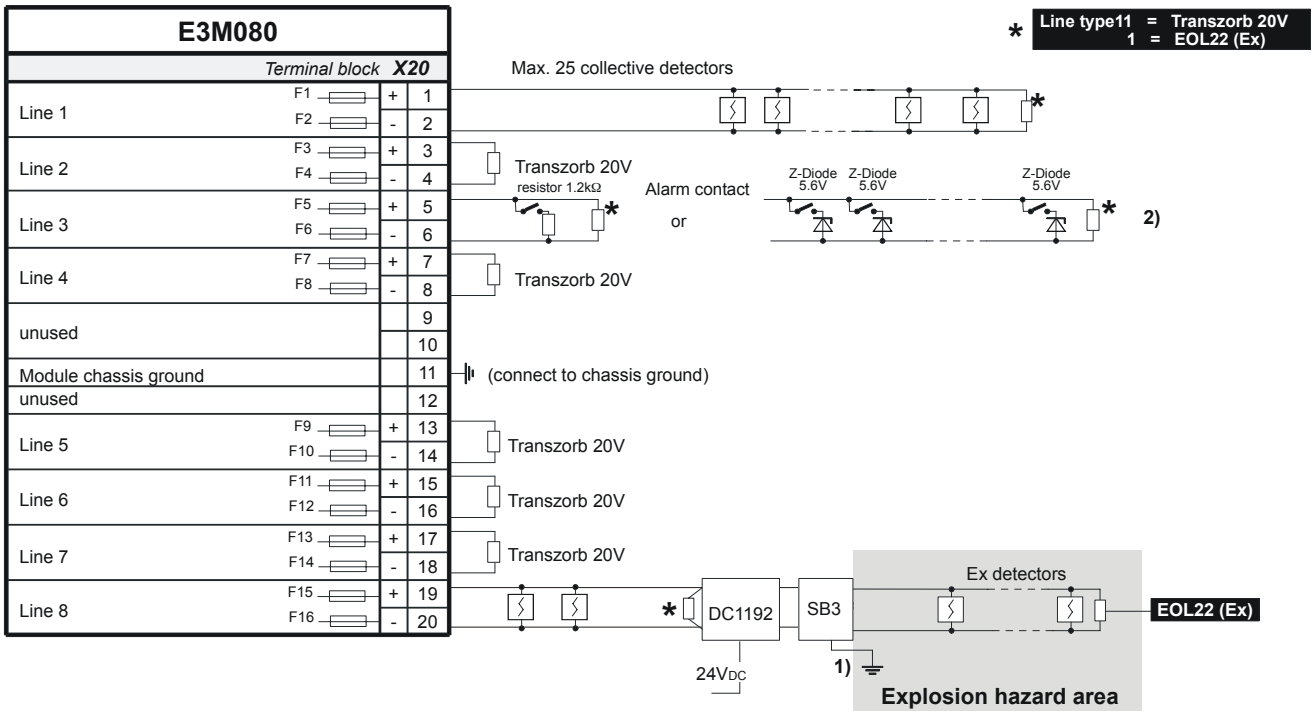

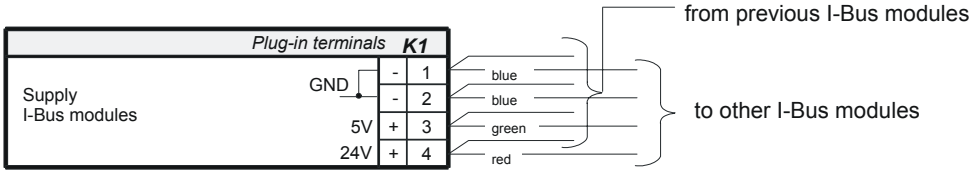

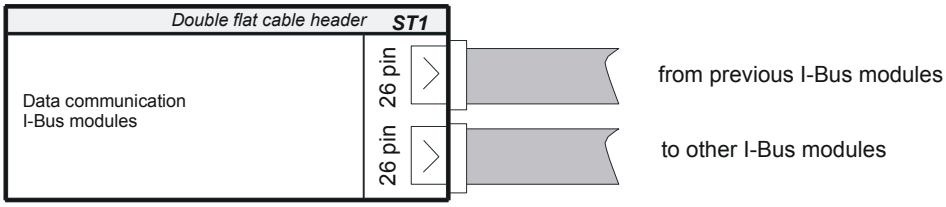

1) Local ground connection
2) To read in technical alarms. Do not mix with detectors on the same line

9.9 Connection "Collective" SynoLINE600/-Ex

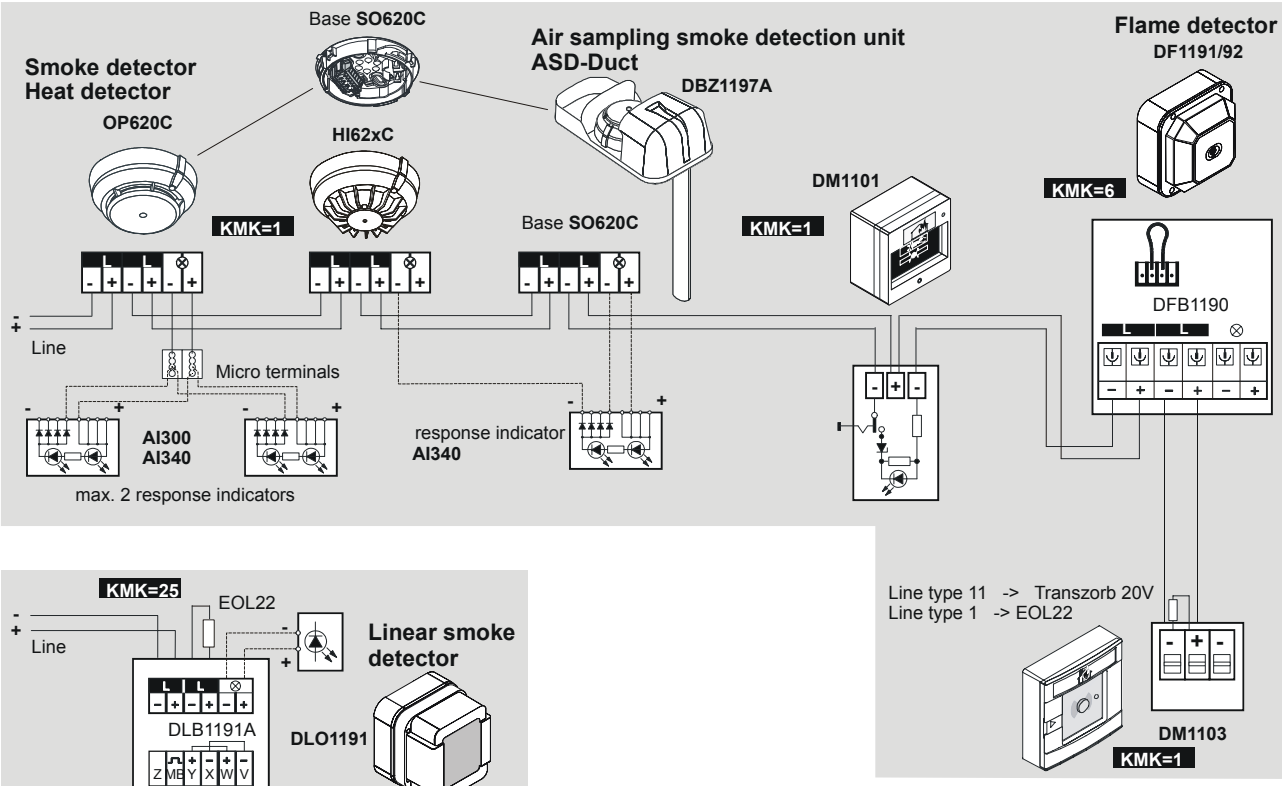

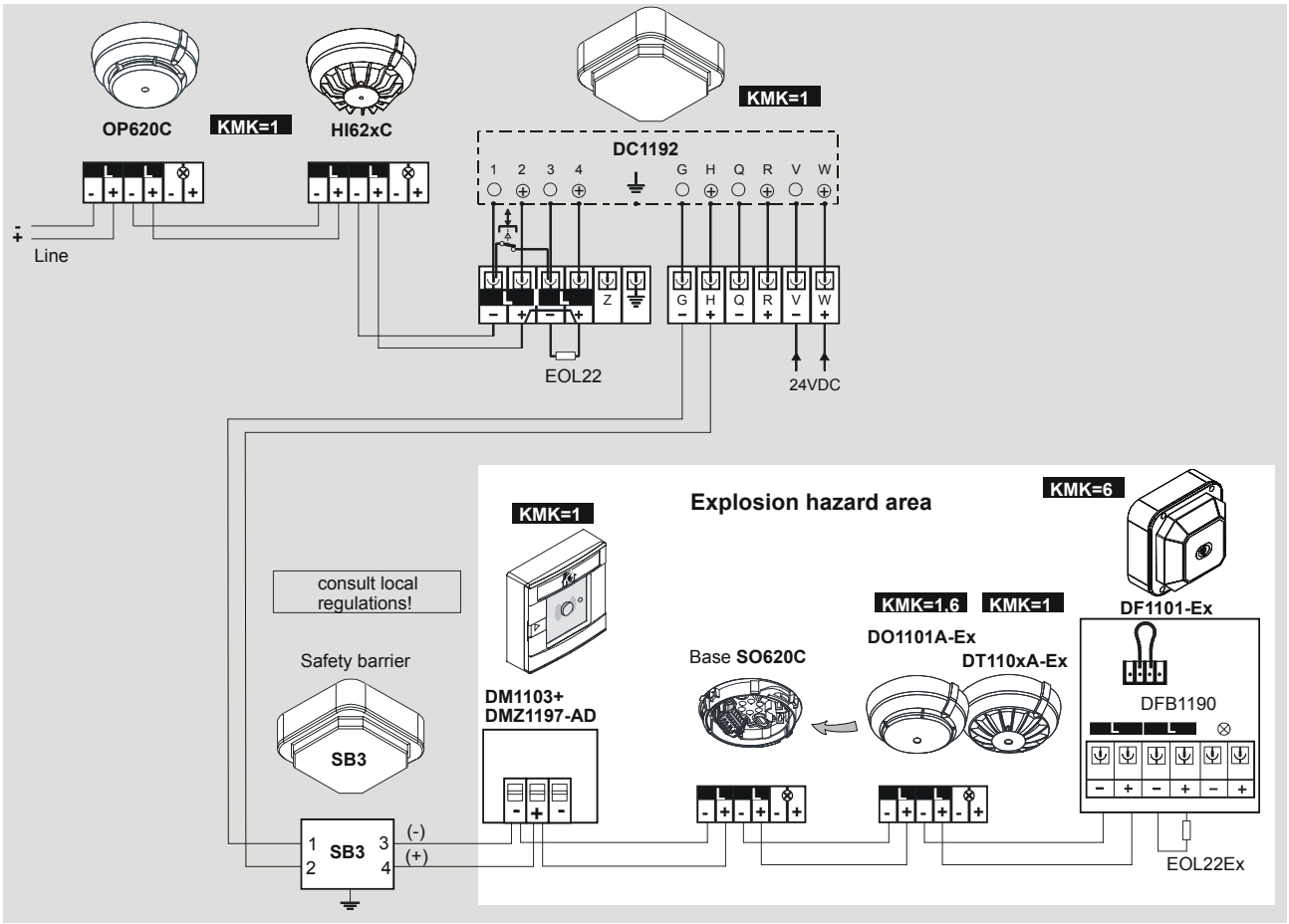

KMK Load factor for collective elements SynoLINE600 (limited by 25 per line)

➔ Details see document 007836

10 E3M111 Line module ”SynoLOOP”

10.1 Overview

- Line module for addressable Synova™ detectors
- I-Bus module with line processor and independent emergency operation processor
- Designed for four loop lines or stub lines
- Line inputs protected against over voltage
- Card format 100mm x 200mm
- I-Bus address is set at programming switch ”S3”

10.2 Key data

Addresses per line	...128 [1)]
Number of wires	2
Twisted cable	recommended
Line resistance	...150Ω with 128 detectors [1)]
Line capacitance	...300nF [1)]
Short-circuit proof line	yes (automatic detectors, manual call points, input/output modules with line separator)
Quiescent current at 24V	210mA with 512 detectors (50mA without detectors + 0.31mA per D-Bus user)
Current at supply output	....500mA / 18...30VDC (not stabilized)

[1)] Limitations see document 007836

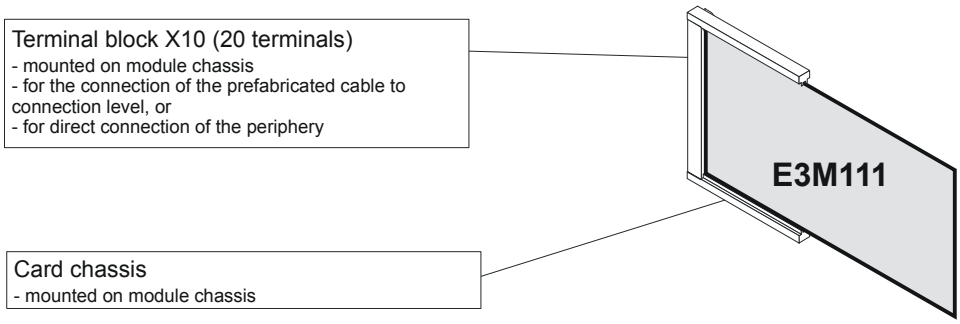

10.3 Special functions

Line separator

Upon short circuit the part of the line that malfunctions must be separated from the rest of the line. This is carried out by line separators integrated in each detector, manual call point and input/output module. According to EN54, a ”simple error” may not cause the malfunction of more than 32 detectors. After the short circuit the line automatically reverts to ”Normal operating condition”.

10.4 Important components

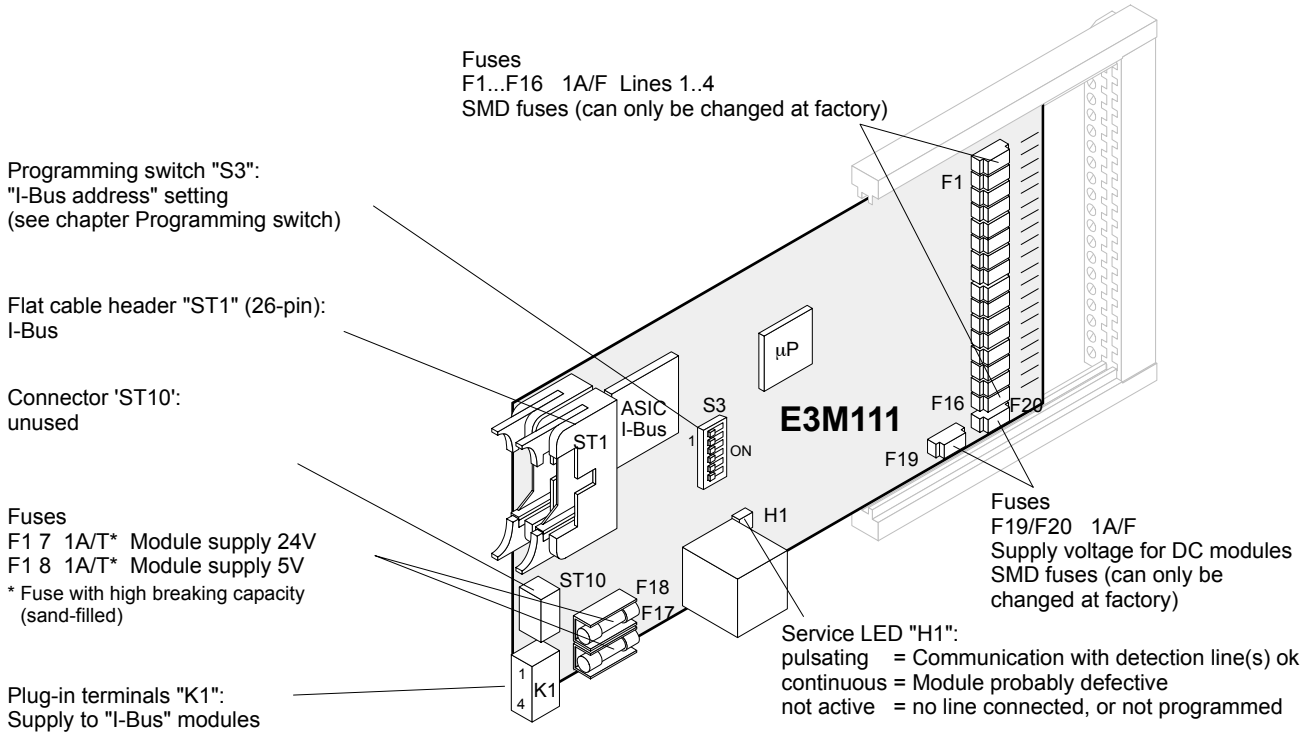

10.5 Programming switch ”S3”

To set I-Bus address. Each element (module) connected to the I-Bus must have an individual address (number). This is set on programming switch ”S3”. Maximum 16 I-Bus devices.

Function / I-Bus address		**Programming switch S3**					
No.		S3-1	S3-2	S3-3	S3-4	S3-5	S3-6
0	Module out of commission (unused)	off	off	off	off	off	off
1	I-Bus user number 1	on	off	off	off	off	off
2	2	off	on	off	off	off	off
3	3	on	on	off	off	off	off
4	4	off	off	on	off	off	off
5	5	on	off	on	off	off	off
6	6	off	on	on	off	off	off
7	7	on	on	on	off	off	off
8	8	off	off	off	on	off	off
9	9	on	off	off	on	off	off
10	10	off	on	off	on	off	off
11	11	on	on	off	on	off	off
12	12	off	off	on	on	off	off
13	13	on	off	on	on	off	off
14	14	off	on	on	on	off	off
15	15	on	on	on	on	off	off
16	16	off	off	off	off	on	off

”S3-1...6” are set to ”off” at the factory

10.6 Connections

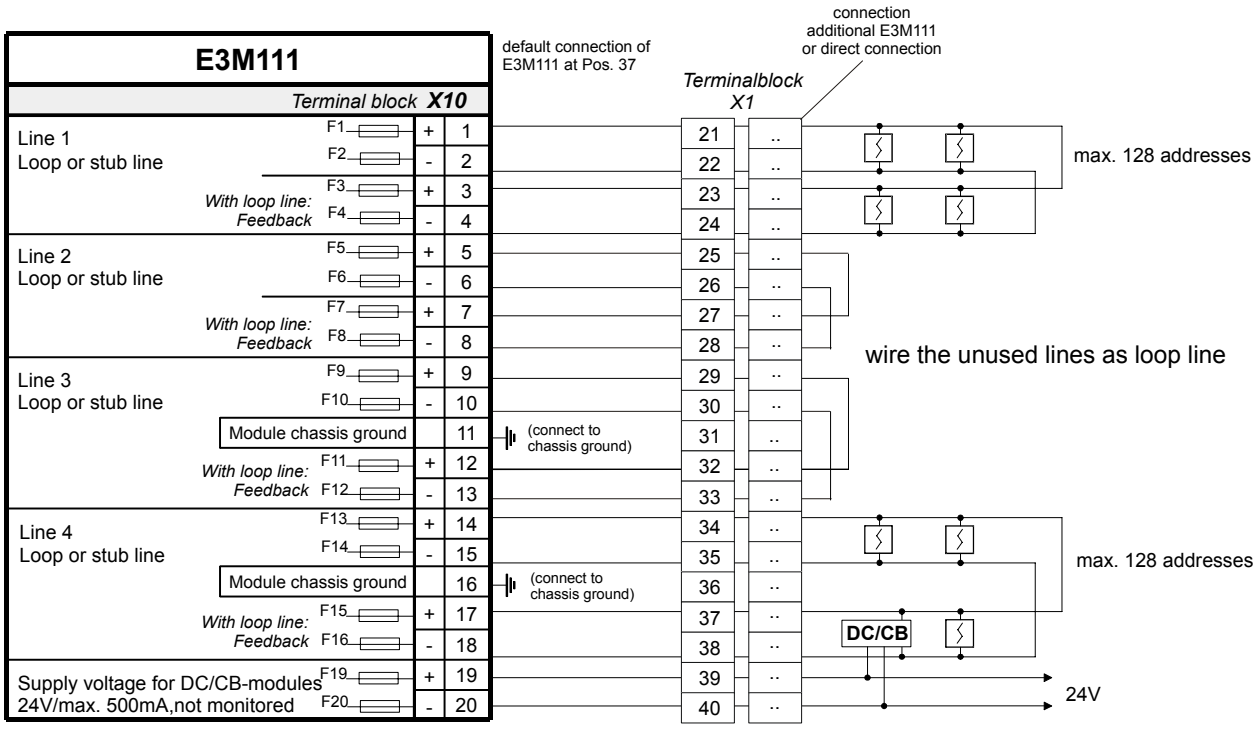

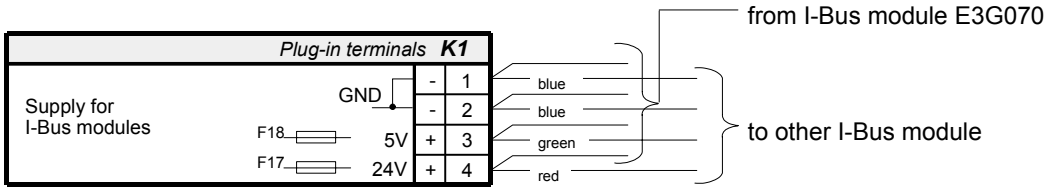

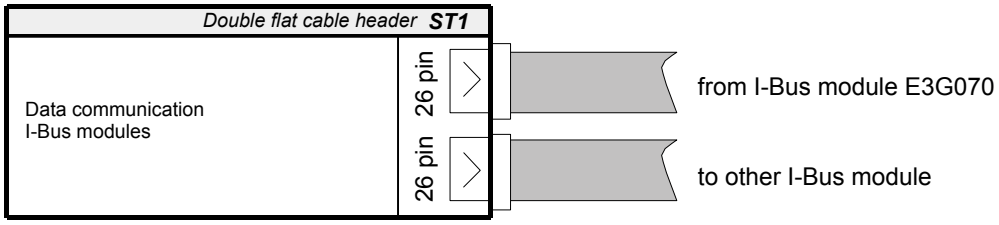

10.7 Connection "Addressable" SynoLOOP

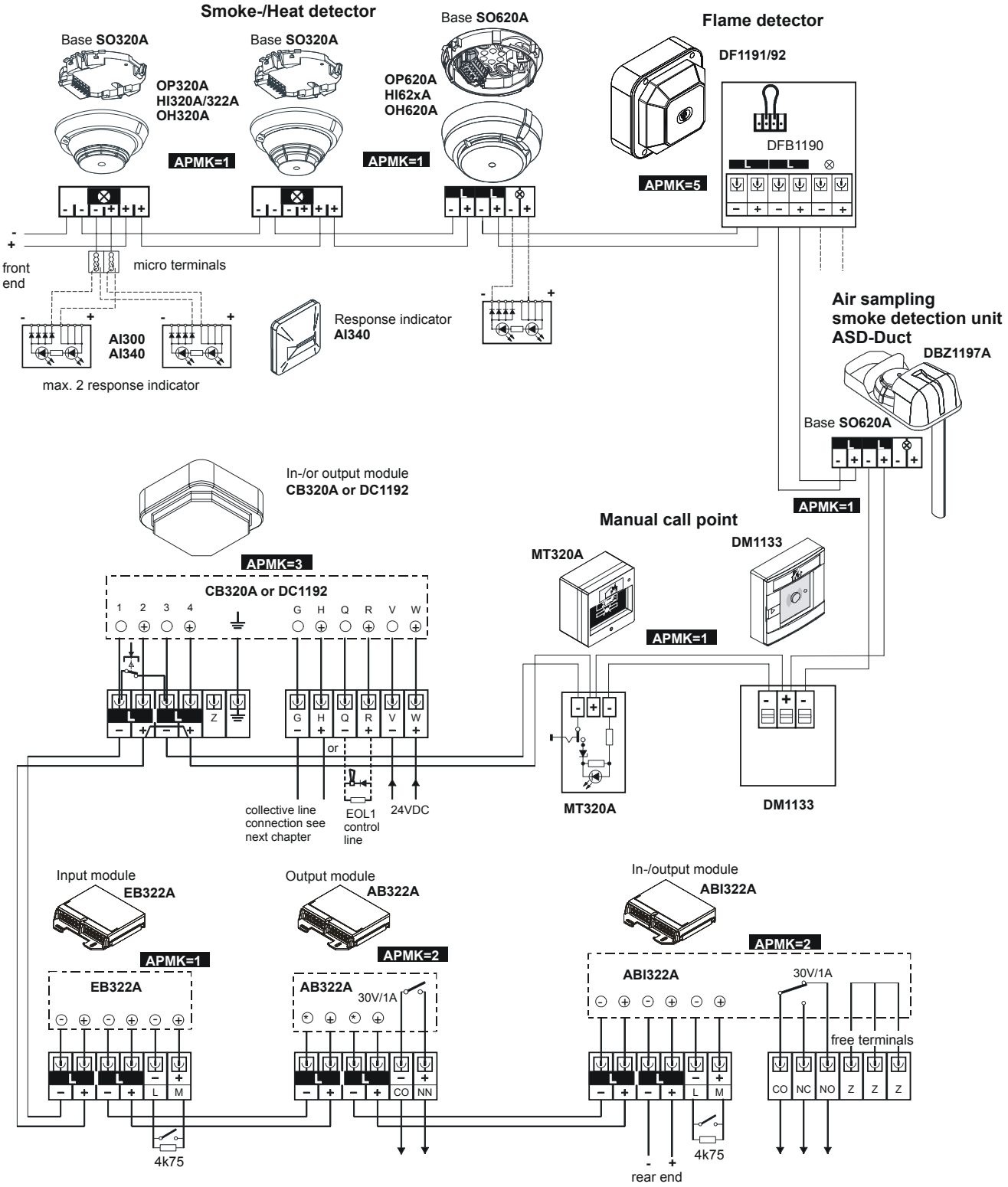

APMK Load factor for addressable elements SynoLOOP (limited by 128 per loop)

➔ Details see document 007836

10.8 Connection "Conventional" SynoLINE300

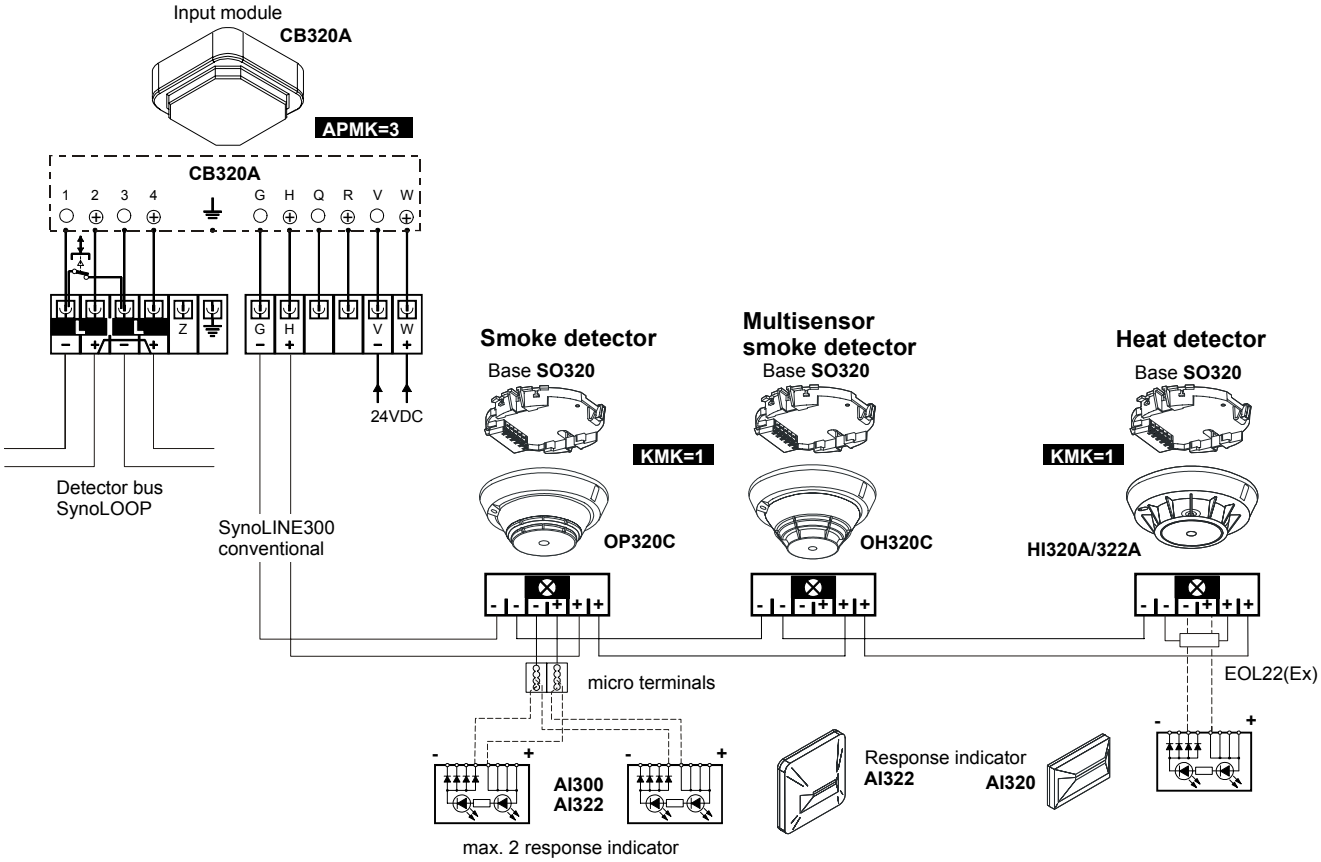

KMK Load factor for conventional elements SynoLINE300 (limited by 32 per line)

➔ Details see document 007836

10.9 Connection "Collective" SynoLINE600

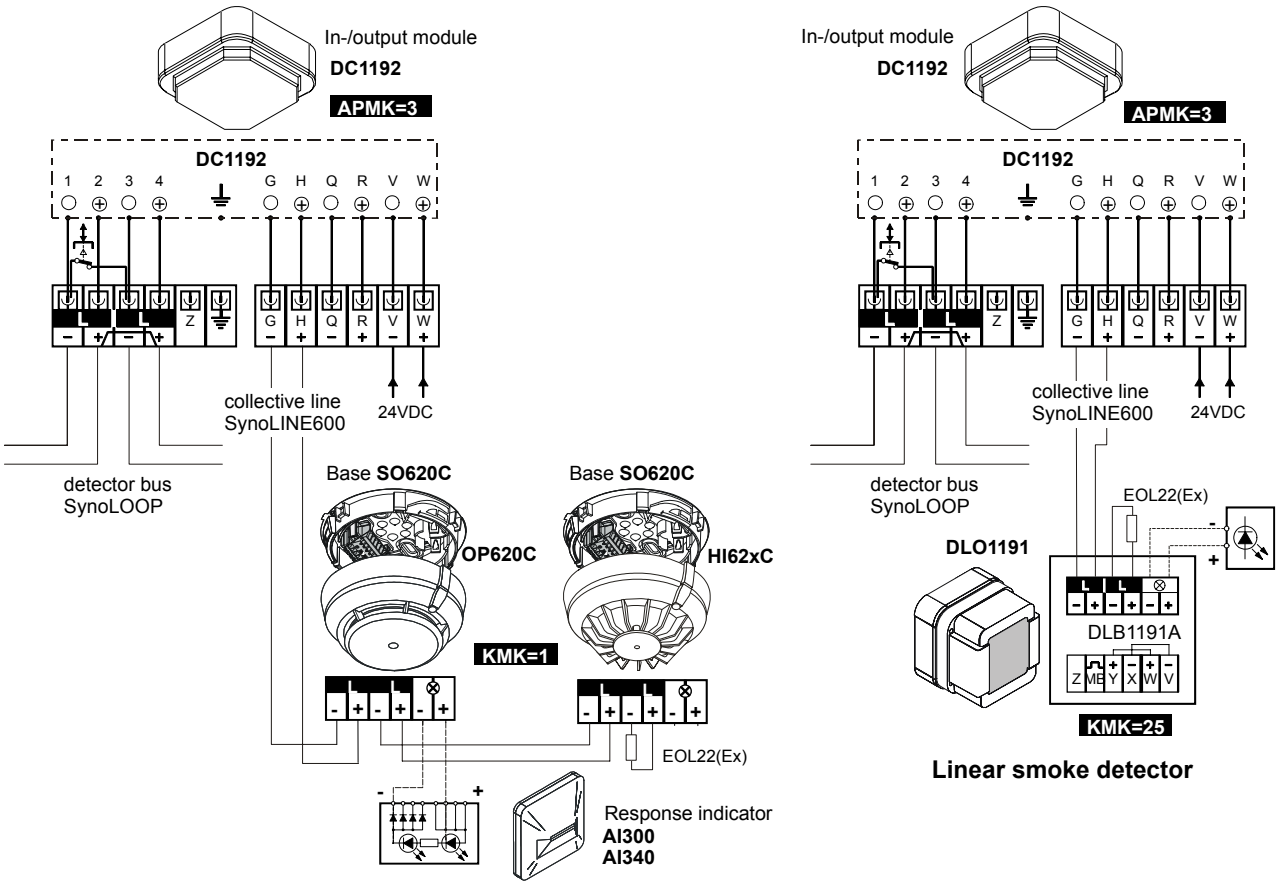

KMK Load factor for collective elements SynoLINE600 (limited by 25 per line)
➔ Details see document 007836

10.10 Connection "Collective" SynoLINE600-Ex

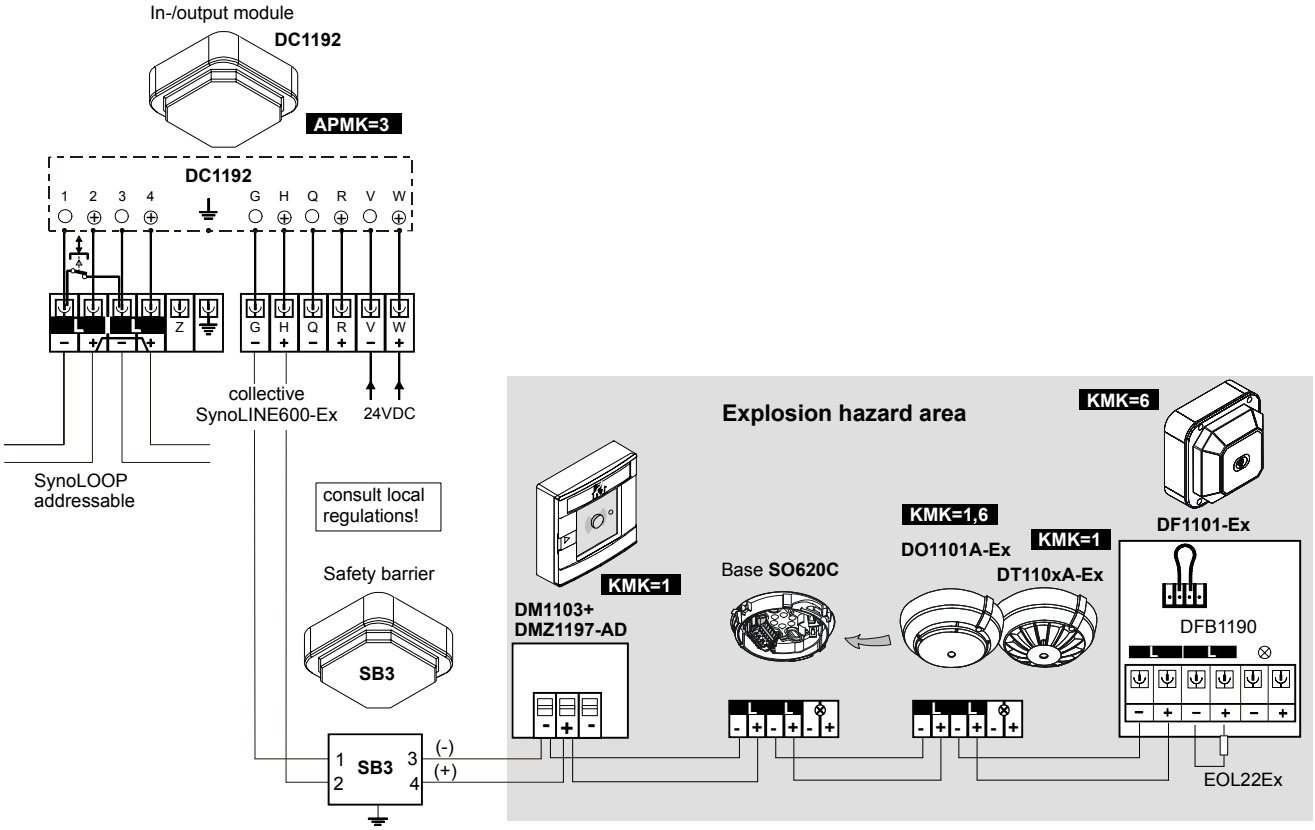

KMK Load factor for collective elements SynoLINE600-Ex (limited by 25 per line)

➔ Details see document 007836

11 E3I040 I-Bus/LON module

11.1 Overview

- Converter **I-Bus** to **LON-Bus**
- Up to 32 LON-Bus devices connectable
- With 24V supply output
- Selectable ground fault monitoring, detected via E3G070 (for application details see chapter 6, “Ground fault monitoring”)
- Board format 100mm x 200mm
- I-Bus address is set at programming switch ”S3”
- Only one module per station possible

11.2 Application

Required for all LON applications within FC700A, such as:

– LON-I/O p.c.b. K3I110
– LON/Mimic Display converter K3I050 with Mimic display drivers K3R072 (or panels B3R051)
– Floor repeater panel B3Q580
– Floor repeater panel with control functions B3Q590/595

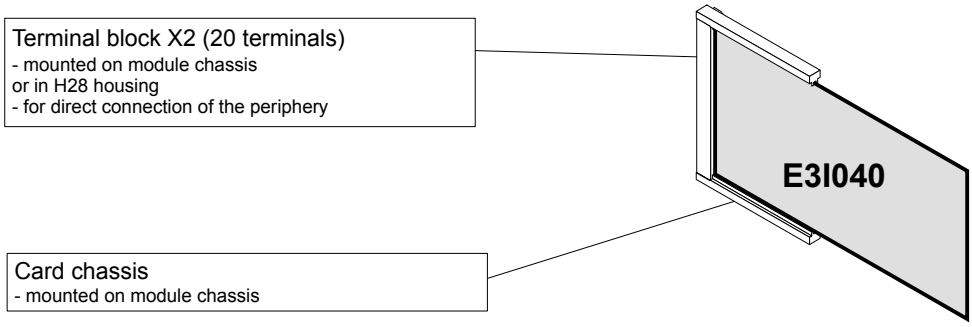

11.3 Key data

Number of devices per line		...32
LON-Bus:	number of wires	2
	cable type	twisted (10 twists per m)
	max. cable length	– standard cable twisted 0,8mm ø unshielded as ’stub line’ ...1000m – same but as ’free topology’ 1) .....500m – using MICC-cable .....700m – using MICC-cable as ’free topology’ 1) .....300m – using special cable Belden 85102 or 8471 ...2700m
LON-Bus: connection		twisted cable necessary
Typical current consumption (24V)		15mA without load on output (pin 9/10)
Rating supply output (pin 9/10)		max. 860mA / 20....29,6V

1) free topology see page 45

11.4 Wiring principle

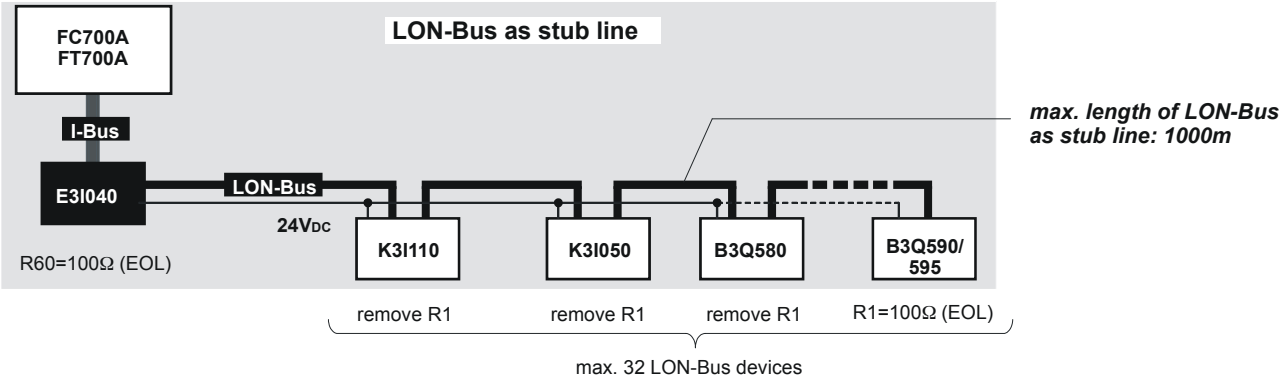

Note:

- The EOL resistors R1 (100Ω) have to be removed on all LON-Bus devices except the last one on the line.

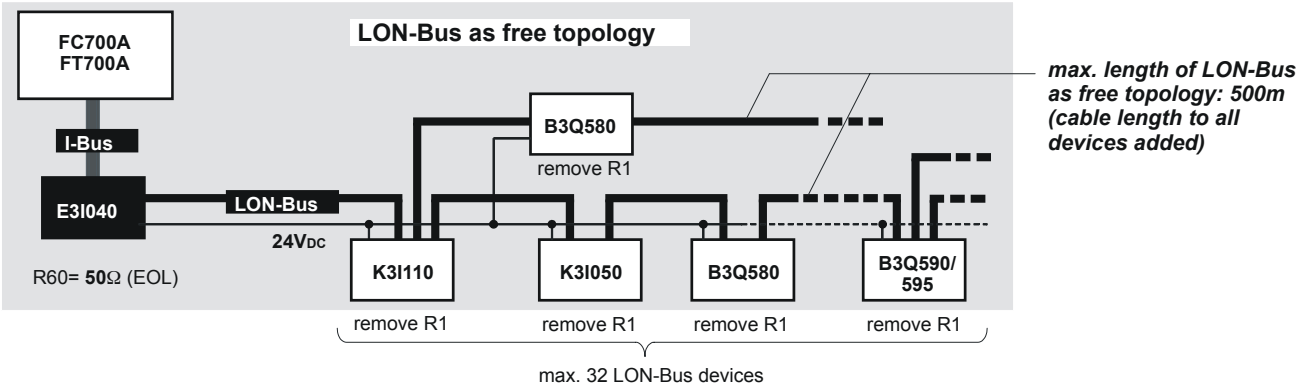

Note:

- The EOL resistors R1 (100Ω) have to be removed on all LON-Bus devices. The EOL resistor R60 on E3I040 has to be changed to **50**Ω (e.g. use 2 resistors of 100Ω in parallel circuit).
- T-taps are only possible from the terminal blocks of the LON-Bus devices.

11.5 Important components

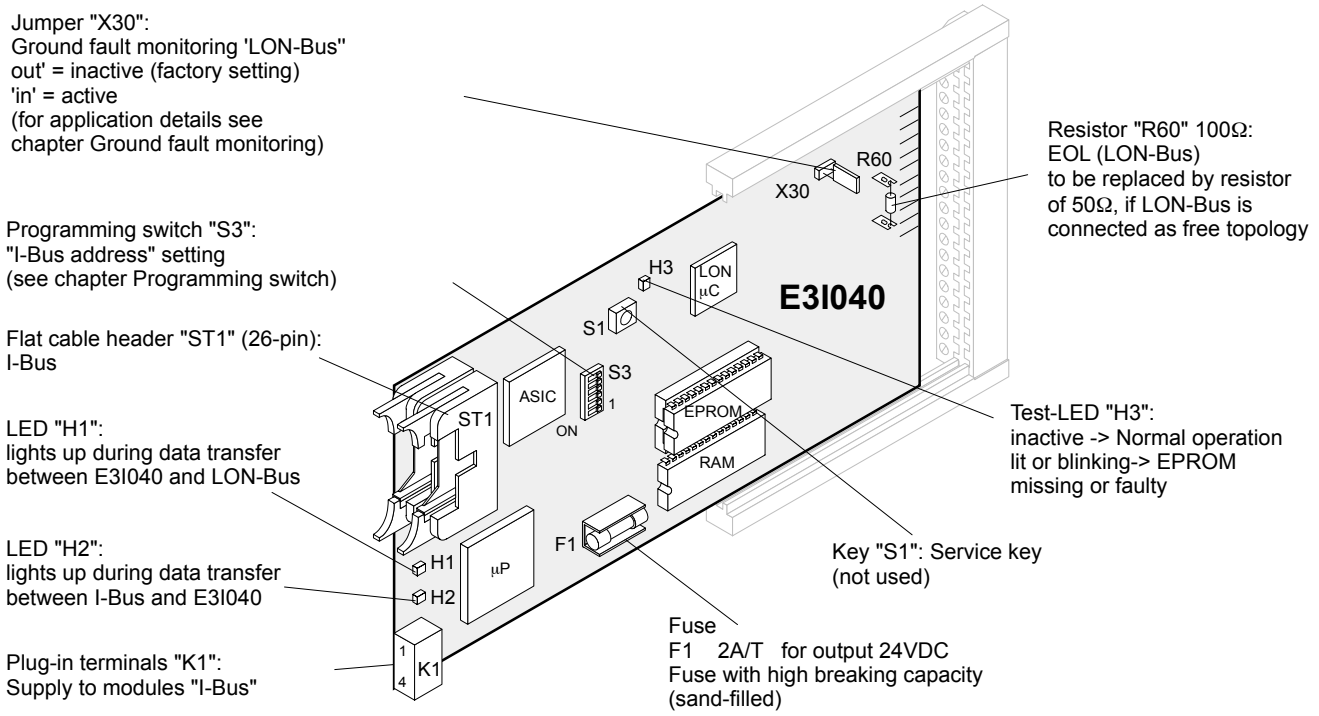

11.6 Programming switch ”S3”

To set I-Bus address. Each element (module) connected to the I-Bus must have an individual address (number). This is set on programming switch ”S3”. Maximum 16 I-Bus devices.

Function / I-Bus address		**Programming switch S3**					
No.		S3-1	S3-2	S3-3	S3-4	S3-5	S3-6
0	Module out of commission (not used)	off	off	off	off	off	off
1	I-Bus device number 1	on	off	off	off	off	off
2	2	off	on	off	off	off	off
3	3	on	on	off	off	off	off
4	4	off	off	on	off	off	off
5	5	on	off	on	off	off	off
6	6	off	on	on	off	off	off
7	7	on	on	on	off	off	off
8	8	off	off	off	on	off	off
9	9	on	off	off	on	off	off
10	10	off	on	off	on	off	off
11	11	on	on	off	on	off	off
12	12	off	off	on	on	off	off
13	13	on	off	on	on	off	off
14	14	off	on	on	on	off	off
15	15	on	on	on	on	off	off
16	16	off	off	off	off	on	off

”S3-1...6” are set to ”off” at the factory

11.7 Connections

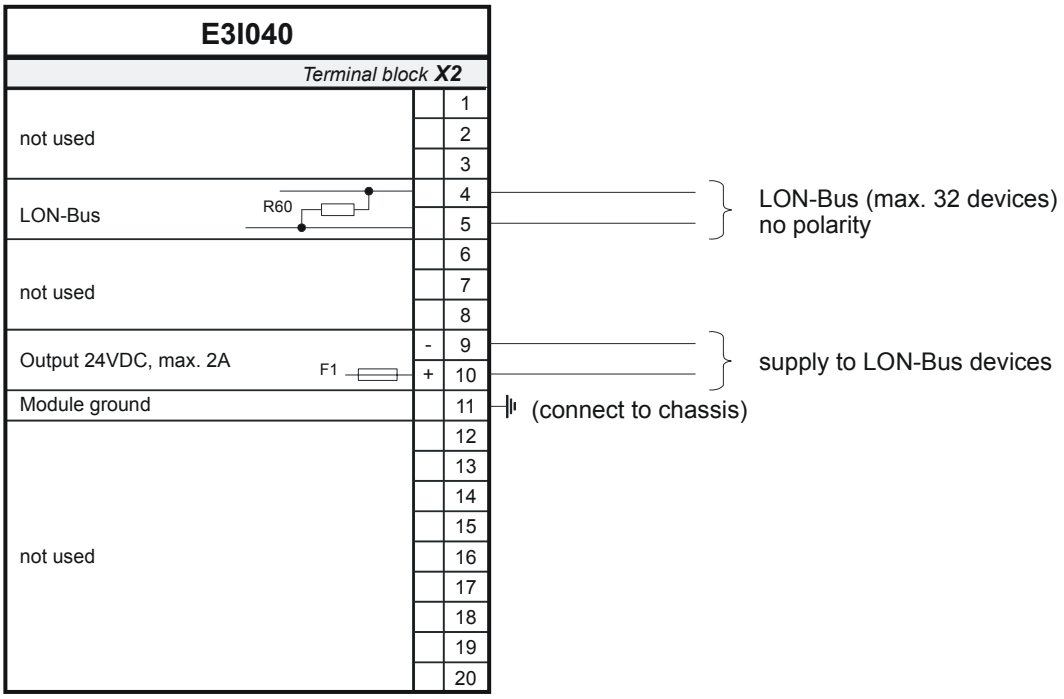

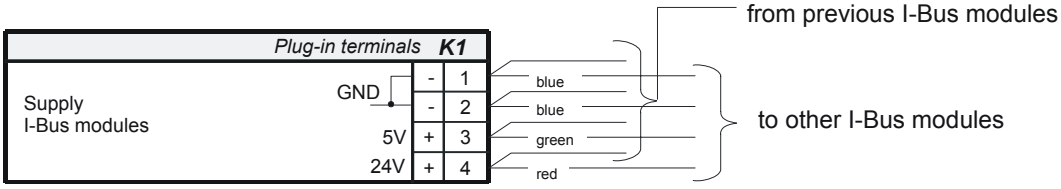

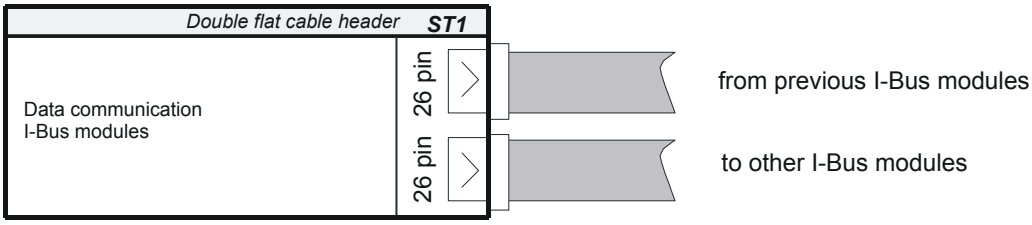

12 E3I020 RS232 module

12.1 Overview

- Optional device to B3Q700
- Contains 2 serial RS232 interfaces
- Function of interfaces is programmable
- For the conversion of the HCMOS level to RS232
- An interface with extended functions e.g. for telephone modems
- Both interfaces galvanically isolated and with EMI protection
- Communication and supply via flat cable
- Card format 100mm x 160mm

12.2 Application

Two application possibilities are provided:
a) Installation in the control unit FC700A
b) Installation at the rear of the control terminal FT700A

Application a)
– 2 RS232 interfaces from B3Q700 (FC700A)
– Mounted on the module chassis via card chassis, mounting space 27

Application b)
– 2 RS232 interfaces from control terminal B3Q700 (FT700A)
– Screwed to the rear of the control terminal B3Q700 and protected with a special shielding (see document no. 007830 “Installation instructions”)

As module in the control unit FC700A

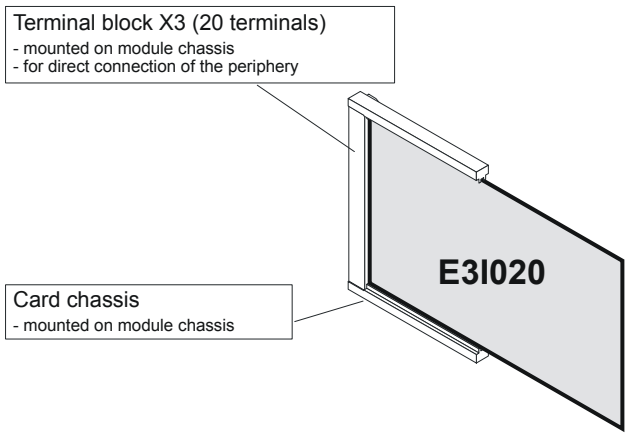

As accessory to FT700A

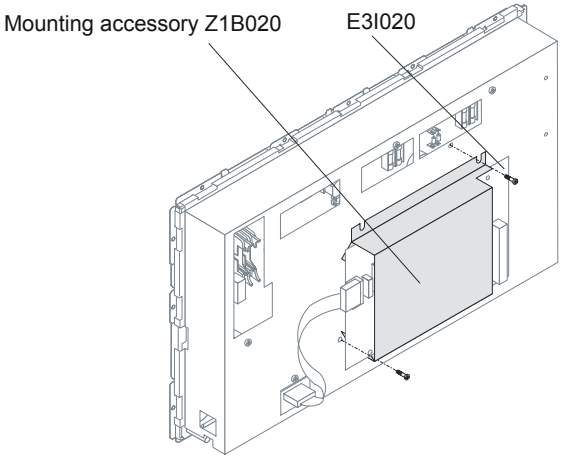

12.3 Wiring principle

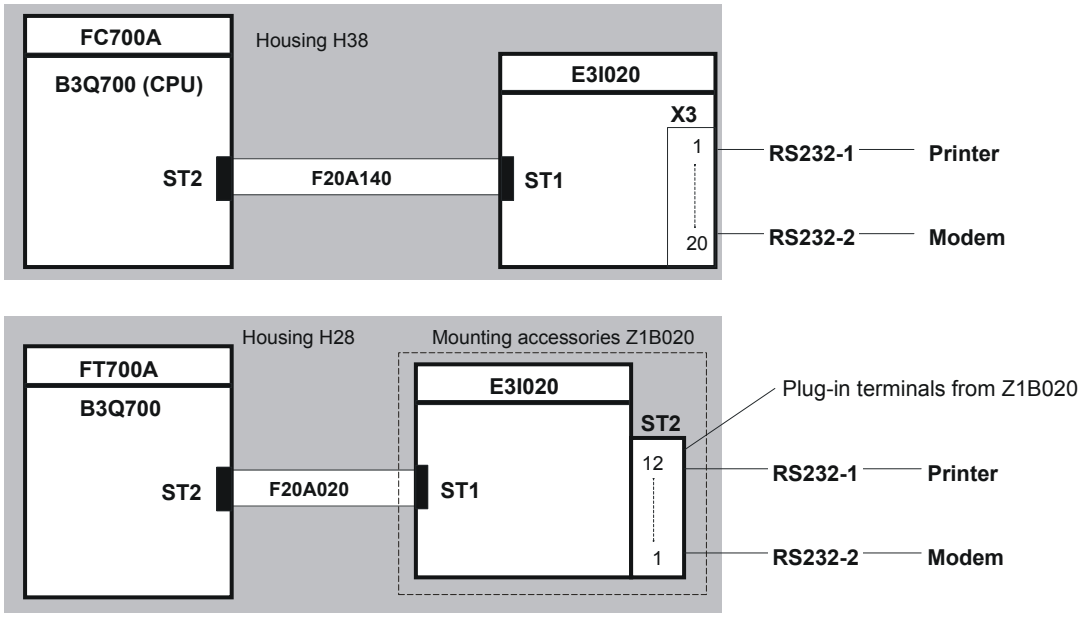

12.4 Key data

Operating voltage	5V from B3Q700 via flat cable F20A...
Quiescent current increase B3Q700 when operating one E3I020	25mA (increase on 24V-side)

12.5 Connections

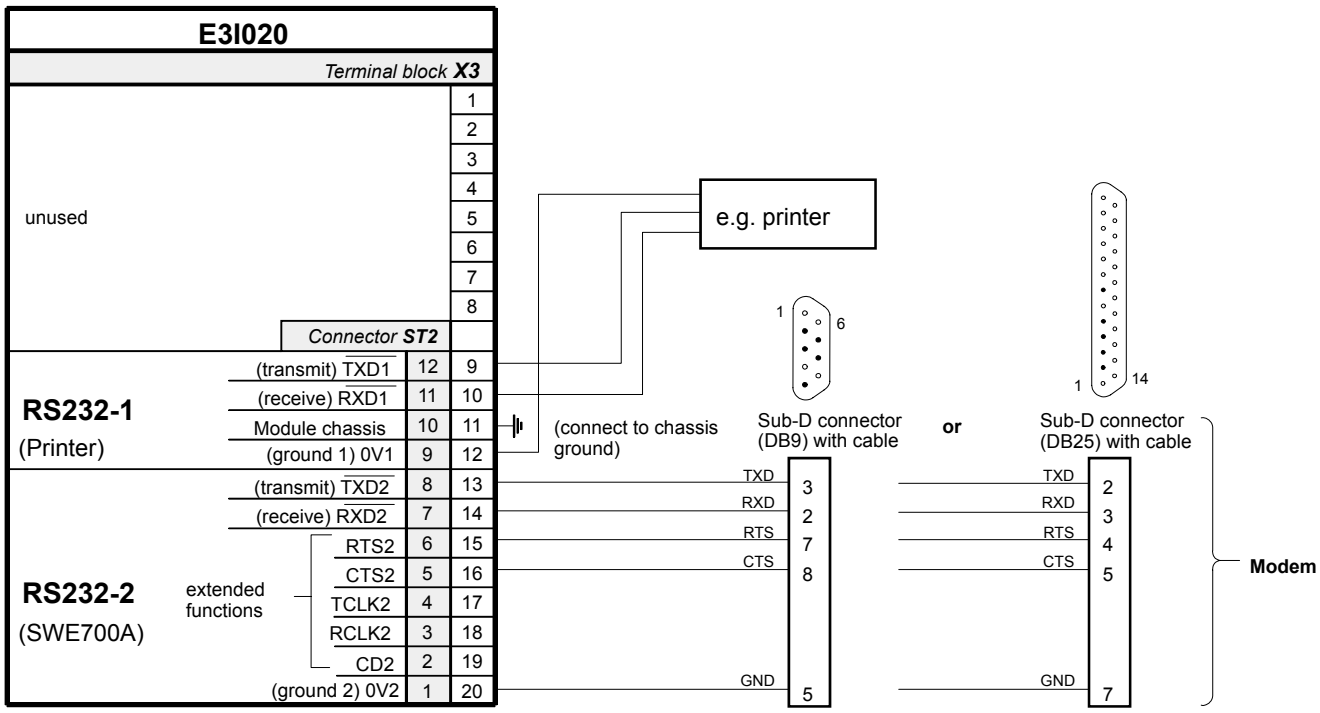

Depending on type of modem the signals 'RTS/CTS' must not be wired

12.6 Important components

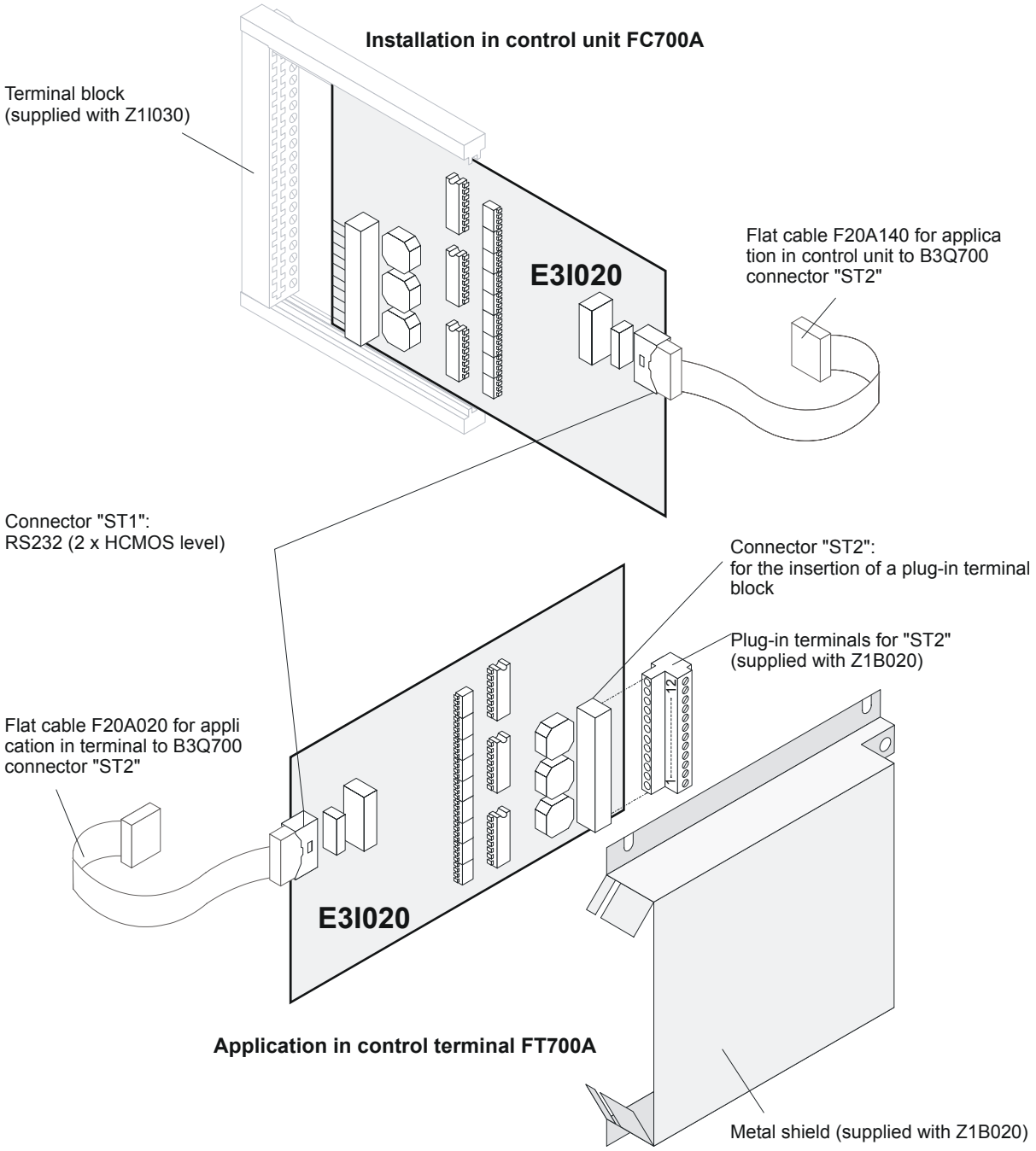

13 E3H020 C-Bus Gateway

13.1 Overview

- Connection C-Bus network <-> Building management system via V28 interface (RS232) ISO1745 Protocol
- Interface galvanically isolated
- Ground fault monitoring, detected via master module B3Q700 (for application details see chapter 6)
- Lithium battery for RAM buffering
- Card format 233 x 200mm

13.2 Application C-Bus ISO1745

Max. number of Gateways per C-Bus	15
Station type FG700A	✔
Download of FG configuration data necessary	✔
Processing capacity	see document 007836

– Automatic data transfer of all **FC700A** to **FG700A** in the start-up phase
– For **FG700A** → **CKQ007.60** (EPROM Set 2x 512Kx8Bit)
– Install in the fire detection control unit FC700A
– Integrated emergency operation circuit

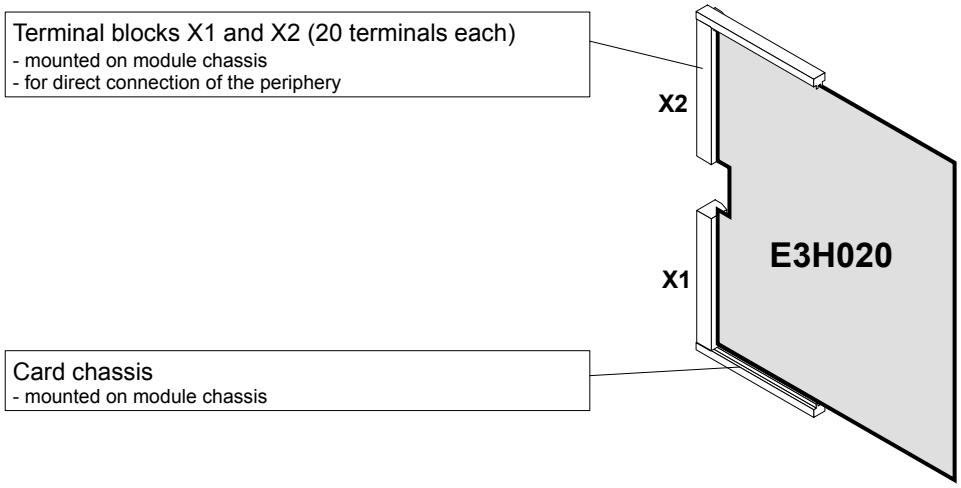

13.3 Key data

Operating voltage		9...30VDC
Current consumption	Quiescent max.	approx. 100mA approx. 220mA
RAM		4x512Kx8Bit

13.4 Wiring principle

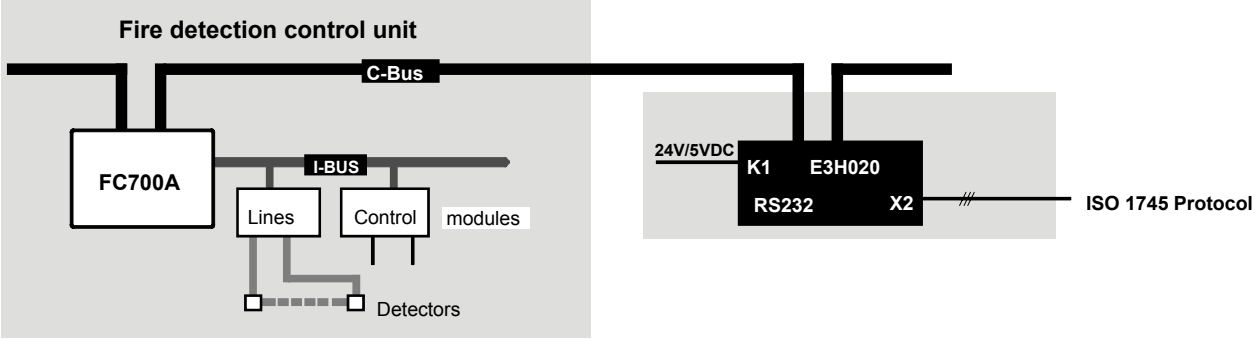

13.5 Supply wiring principle

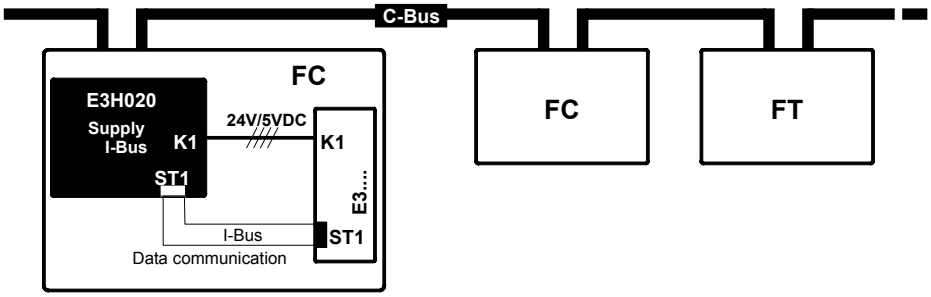

13.6 Important components

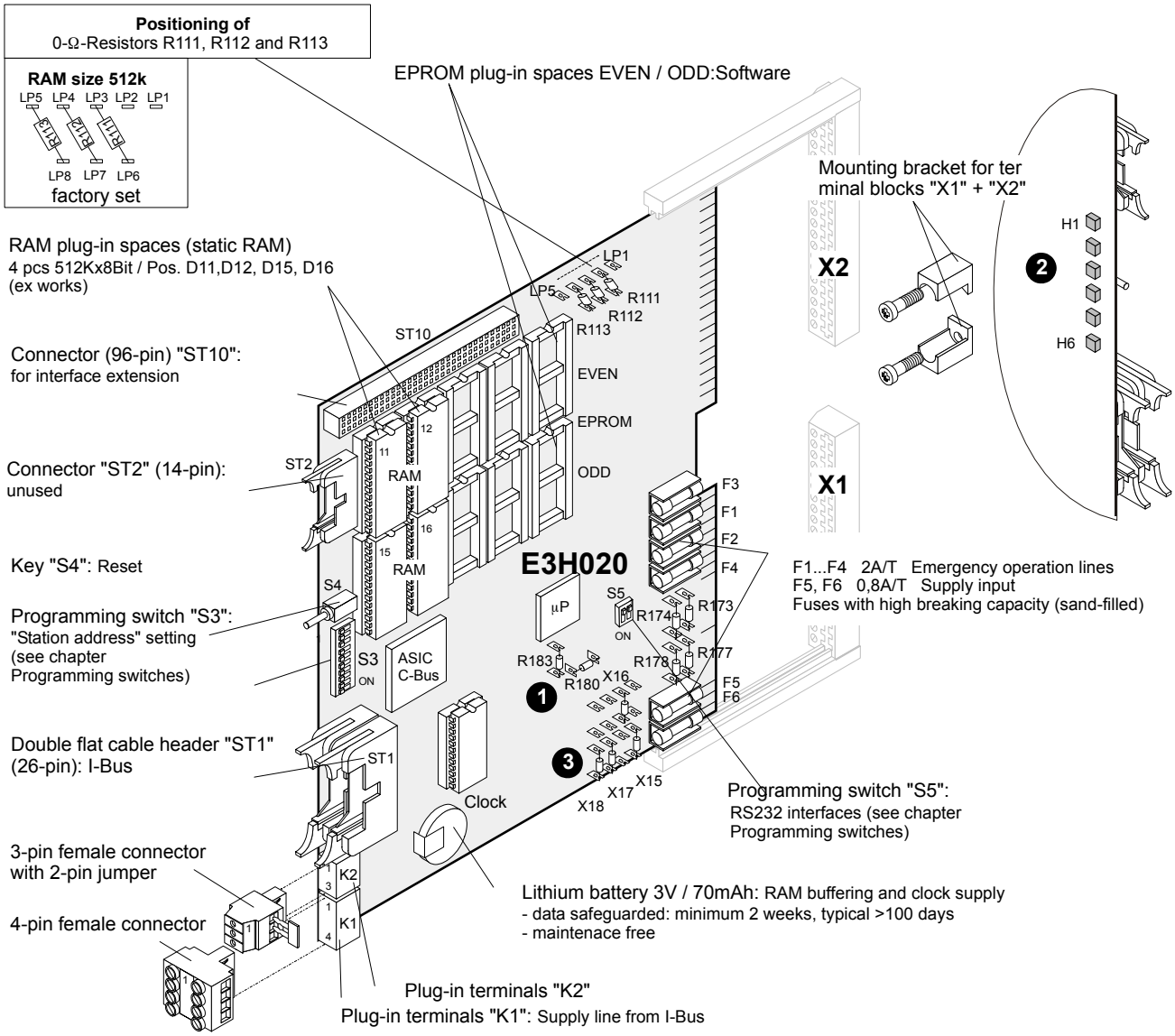

❶ Resistors to modify the C-Bus impedance:	Position	Impedance value **110Ω**, e.g. for G51 0.6mm ø	Impedance value **50Ω**, e.g. for MICC
	R180 / 183	402Ω	182Ω
	R173 / 174 / 177 / 178	110Ω	49.9Ω

Impedance adaptation only required if C-Bus line is > 100m. For other impedance values than 110Ω or 50Ω consult document 007836

❷ LEDs H1... H6 at rear side:	H1	yellow	gateway "down" / emergency operation
	H2	green	normal operation (fast flashing: no data loaded yet; slow flashing: data loaded)
	H3	yellow	network fault
	H4	yellow	network fatal fault
	H5+6	yellow	unused

❸ Programming of X1:	Use of E3H020	0Ω–Resistors
	"FG" + supply from control unit (Input) (X1-17.. 20)	X15 + X16 + X17 + X18
	"FG" + autonomous supply (Output) (X1-17.. 20)	Y15 + Y16 + Y17 + Y18

13.7 Programming switches ”S1” + ”S2”

All switches are set to ”on” at the factory. Switches must always be ’ON’.

Interface	Line		Programming switch S1-1	S1-2	S2-1	S2-2
RS232-1	”transmit”	direct	on			
		unused	off			
	”receive”	direct		on		
		unused		off		
RS232-2	”transmit”	direct			on	
		unused			off	
	”receive”	direct				on
		unused				off

13.8 Programming switch ”S3”

To set the station address.

Function		Programming switch S3 S3-1	S3-2	S3-3	S3-4	S3-5	S3-6	S3-7	S3-8	S3-9	S3-10
Unused (via SWE700A)		off	off	off	off	off					
E3C011	used								on		
	unused								off		

All switches are set to ”off” at the factory

13.9 Programming switch ”S5”

Interfaces RS232-1 and RS232-2, via terminal block ”X2” (internal modem).

Interface	Application	Programming switch S5-1	S5-2
RS232-1	internal modem via terminal block ”X2”	**off**	–
RS232–2 (Service port)	internal modem via terminal block ”X2”	–	**off**

Set to ”off” at factory

13.10 Connections

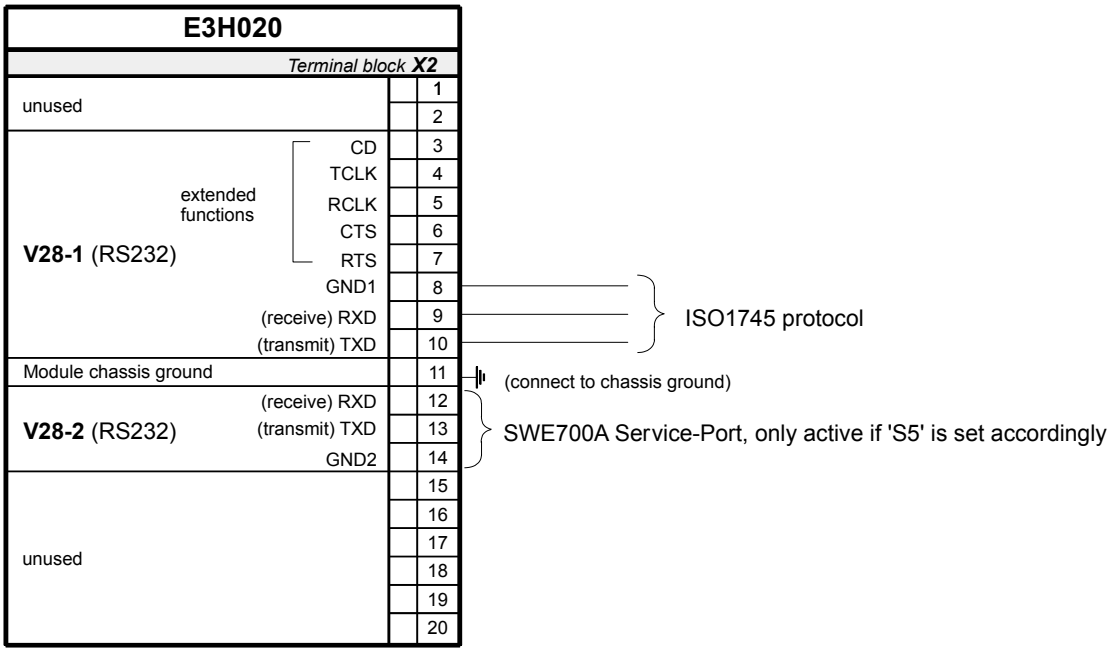

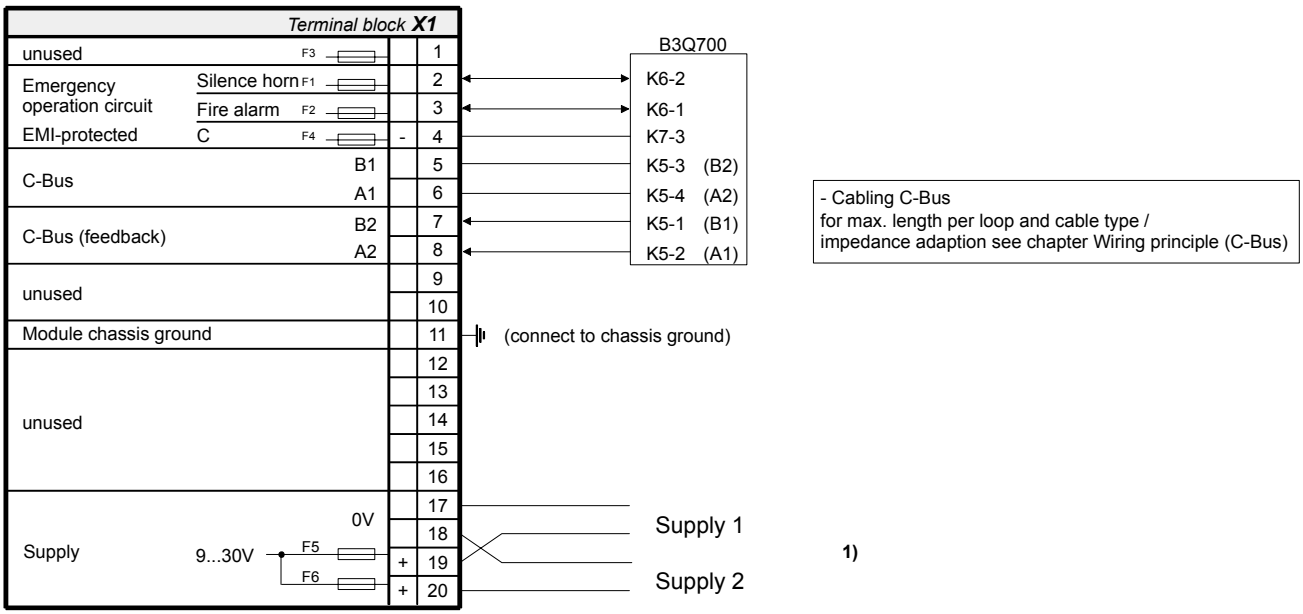

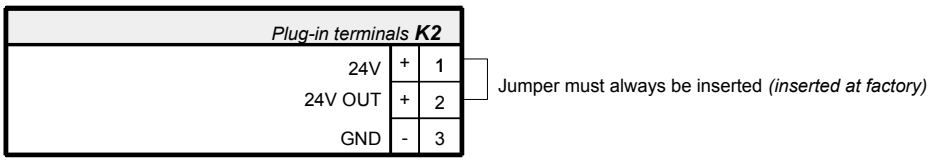

1) Configuration as In-/or output see also jumpers X15, X16, X17, X18, Y15, Y16, Y17, Y18 table in chapter Important components

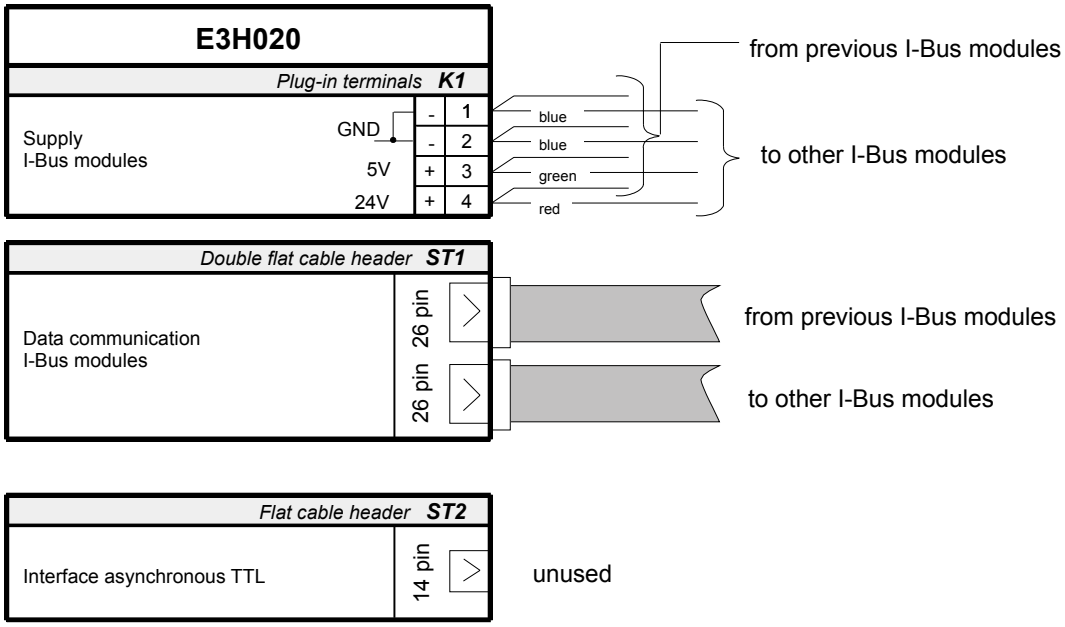
E3H020
Plug-in terminals K1
Supply
I-Bus modules
GND
5V
24V
-
-
+
+
1
2
3
4
blue
blue
green
red
from previous I-Bus modules
to other I-Bus modules
Double flat cable header ST1
Data communication
I-Bus modules
26 pin
26 pin
from previous I-Bus modules
to other I-Bus modules

Flat cable header ST2
Interface asynchronous TTL
14 pin
unused

14 E3L020 Control module ”I/O”

14.1 Overview

- Control module for 16 control inputs/outputs
- Driver output or control input as required
- I-Bus module
- Inputs/outputs with voltage surge and EMI protection
- Individual function allocation of inputs/outputs
- Ground fault monitoring, detected via E3G070 (for application details see chapter 6)
- Card format 100mm x 200mm
- I-Bus address is set at programming switch ”S3”

14.2 Key data

Control outputs	16, load capacity up to 40 mA (24VDC)
Control inputs	16 via volt-free contacts
Quiescent current at 24V	22mA

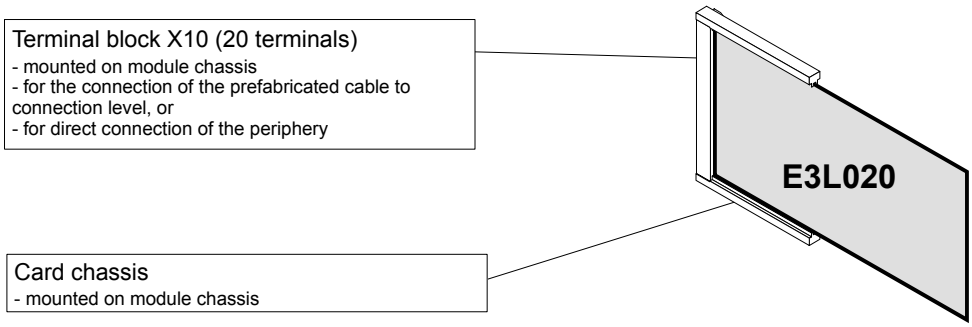

14.3 Important components

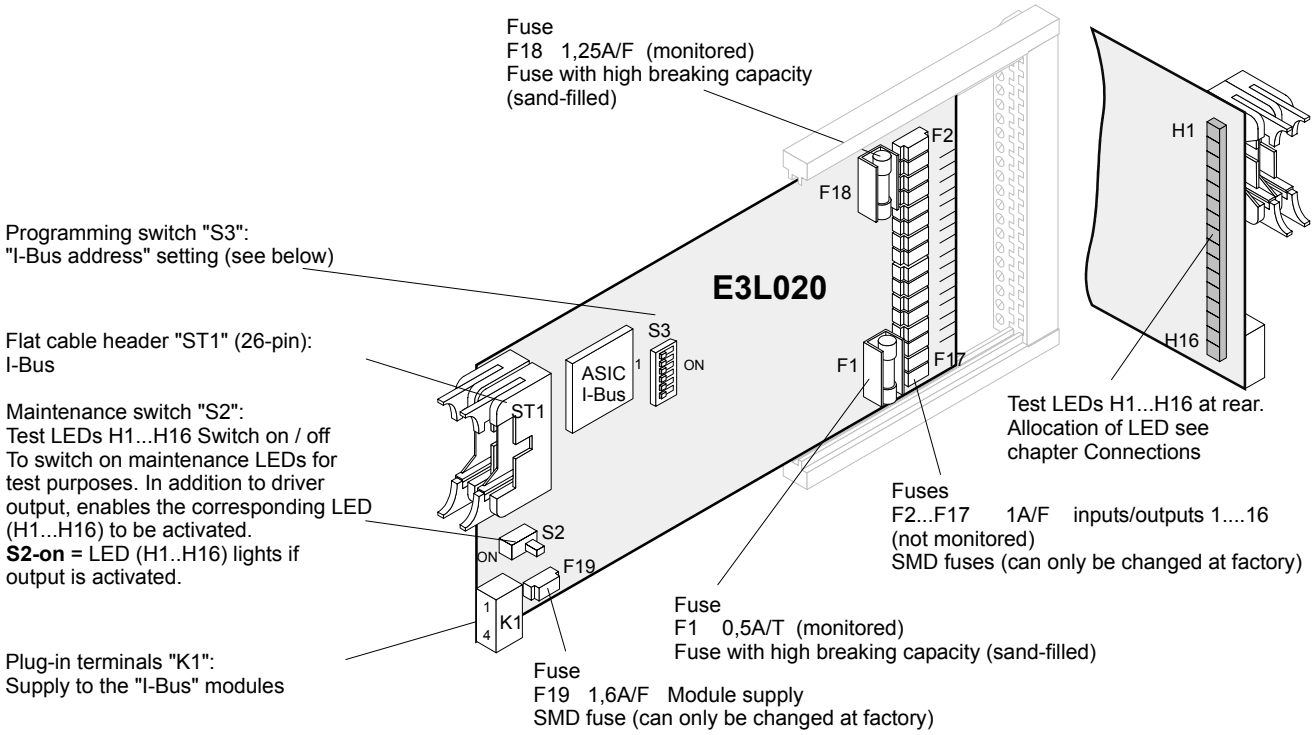

14.4 Programming switch ”S3”

To set I-Bus address. Each element (module) connected to the I-Bus must have an individual address (number). This is set on programming switch ”S3”. Maximum 16 I-Bus devices.

Function / I-Bus address		**Programming switch S3**					
No.		S3-1	S3-2	S3-3	S3-4	S3-5	S3-6
0	Module out of commission (unused)	off	off	off	off	off	off
1	I-Bus user number 1	on	off	off	off	off	off
2	2	off	on	off	off	off	off
3	3	on	on	off	off	off	off
4	4	off	off	on	off	off	off
5	5	on	off	on	off	off	off
6	6	off	on	on	off	off	off
7	7	on	on	on	off	off	off
8	8	off	off	off	on	off	off
9	9	on	off	off	on	off	off
10	10	off	on	off	on	off	off
11	11	on	on	off	on	off	off
12	12	off	off	on	on	off	off
13	13	on	off	on	on	off	off
14	14	off	on	on	on	off	off
15	15	on	on	on	on	off	off
16	16	off	off	off	off	on	off

”S3-1...6” are set to ”off” at the factory

14.5 Connections

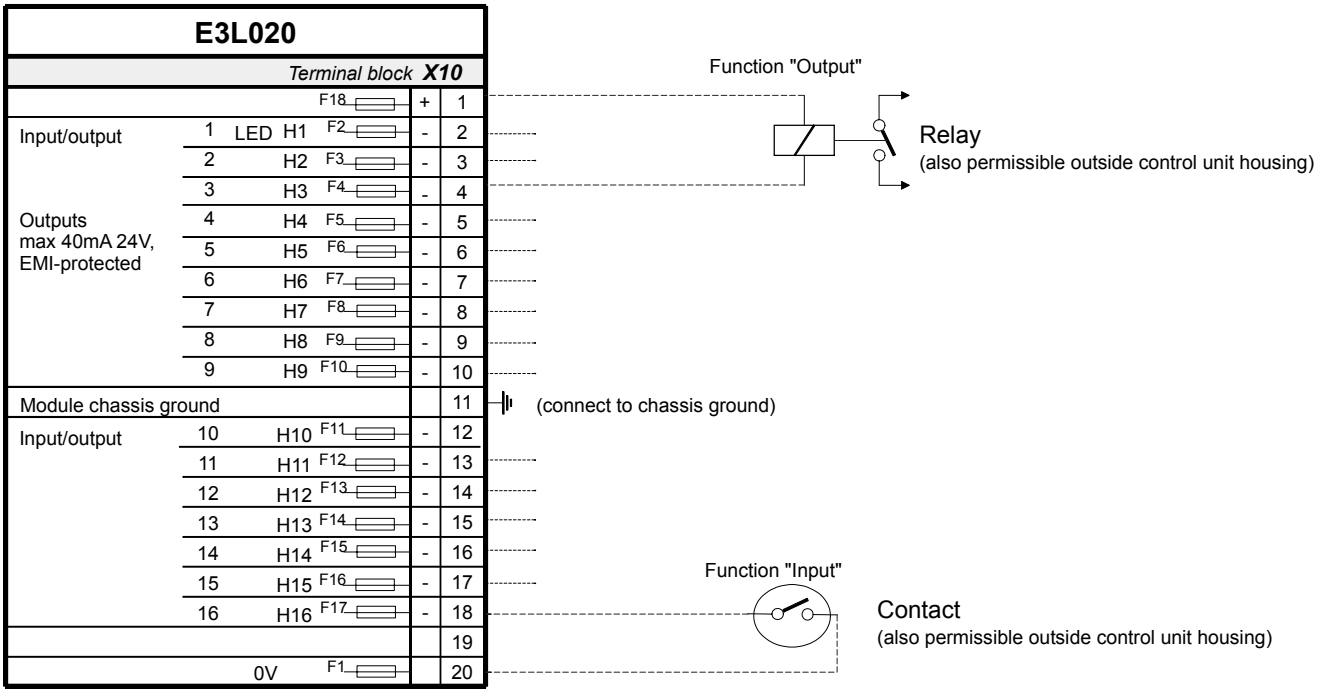

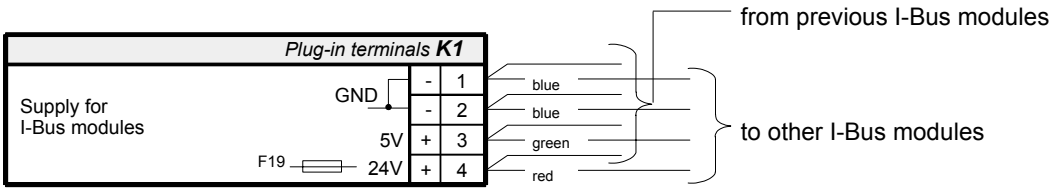

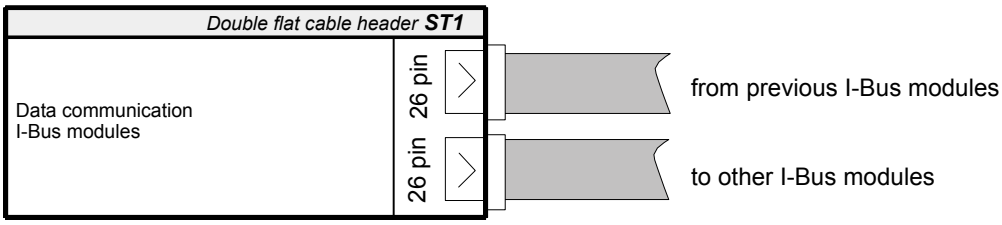

15 E3L030 Control module VdS

15.1 Overview

I-Bus module for the connection of VdS peripheral equipment:

➔ **FBF** Feuerwehr-Bedienfeld: Fire department control panel
➔ **ÜE** Übertragungseinrichtung: Transmission device
➔ **FSD** Feuerwehrschlüsseldepot: Fire department key cabinet
➔ **SST** Standardschnittstelle (VdS) für fremde Lösch-Steuereinrichtung: Standard interface (VdS) for non-Cerberus extinguishing activating device
➔ **TK** Türkontakt Zentrale: Door switch control unit (door open = ÜE disabled)

- Connection line to ÜE, FSD and SST monitored
- All inputs/outputs to the peripheral equipment with EMI and over voltage protection
- Emergency operation capability
- Card format 233 x 200mm
- I-Bus address is set at programming switch ”S3”

15.2 Application

- The VdS module is required for connection of the above-mentioned peripheral equipment.
- It is possible to use several VdS modules or one single VdS module for all CPUs within a C-Bus system.
  Restriction: Activation in emergency operation mode would not be possible. Several VdS modules per CPU would be possible if separate transmission paths are required for different detector types (automatic/manual).
- The VdS module is **not** FM compliant. It may be used in a ground fault monitored installation, but it is not monitored itself. (For details see chapter 6)
- All inputs/outputs are fix allocated (exception LED4)

15.3 Key data

Line resistance for FBF	max. 5Ω or 20Ω per wire*
Line resistance for FSD	max. 5Ω or 50Ω per wire*
Line resistance for ÜE	max. 10Ω per wire*
Line resistance for SST	max. 10Ω per wire*
Control output load	max. 40mA with EMI protection
Quiescent current at 24V	18mA (normal operating mode)

* For details see page 63

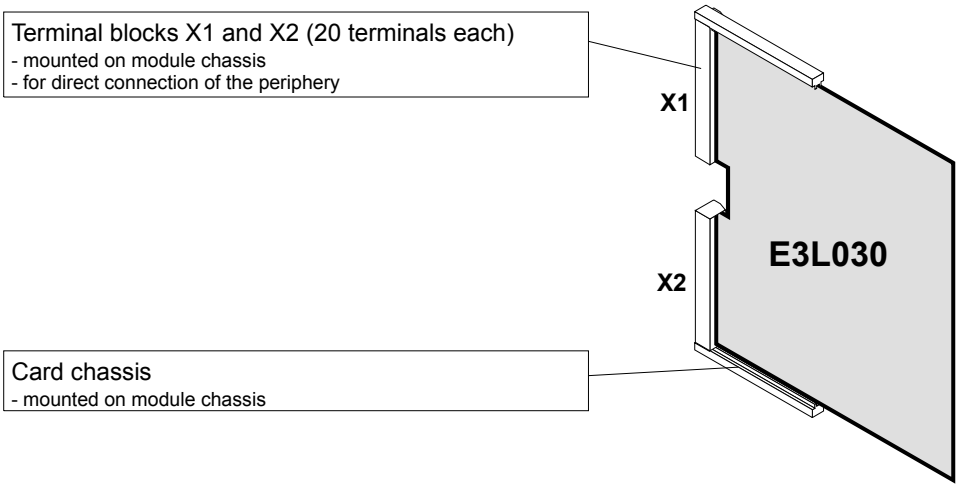

15.4 Important components

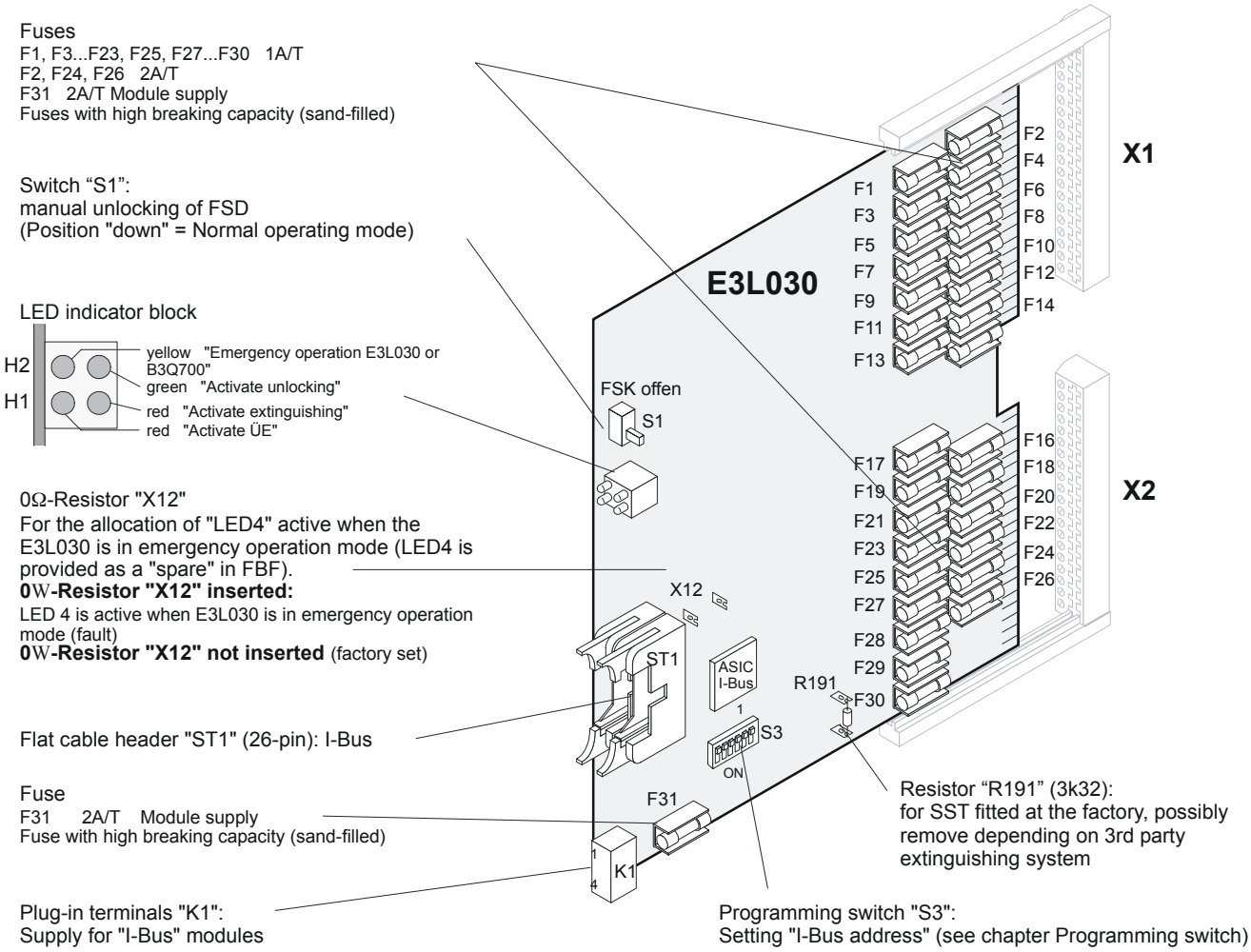

15.5 Programming switch ”S3”

To set I-Bus address. Each element (module) connected to the I-Bus must have an individual address (number). This is set on programming switch ”S3”. Maximum 16 I-Bus devices.

Function / I-Bus address		**Programming switch S3**					
No.		S3-1	S3-2	S3-3	S3-4	S3-5	S3-6
0	Module out of commission (unused) 1)	off	off	off	off	off	off
1	I-Bus user number 1	on	off	off	off	off	off
2	2	off	on	off	off	off	off
3	3	on	on	off	off	off	off
4	4	off	off	on	off	off	off
5	5	on	off	on	off	off	off
6	6	off	on	on	off	off	off
7	7	on	on	on	off	off	off
8	8	off	off	off	on	off	off
9	9	on	off	off	on	off	off
10	10	off	on	off	on	off	off
11	11	on	on	off	on	off	off
12	12	off	off	on	on	off	off
13	13	on	off	on	on	off	off
14	14	off	on	on	on	off	off
15	15	on	on	on	on	off	off
16	16	off	off	off	off	on	off

”S3-1...6” is set to ”off” at the factory
1) E3L030 functions in ”emergency operation” with I-Bus address 0

15.6 Special functions

Emergency operation
An alarm which occurs during system malfunction (emergency operation) can still be handled via FBF and ÜE and FSD can also still be activated.

Function overview during ”emergency operation”

Function	**Emergency operation E3L030**	**Emergency operation CPU**
FBF		
Indicator ”ÜE activated”	●	●
Indicator ”LEDs 5, 6, 7, T5 operational”	-	●
Function ”Silence audible signal”	●	●
ÜE		
Function ”Activate ÜE”	●	●
FSD		
Function ”Activate FSD unlocking”	●	●
SST (Extinguishing standard interface)	-	-
TK (Door switch control unit)	-	●

15.7 Connections

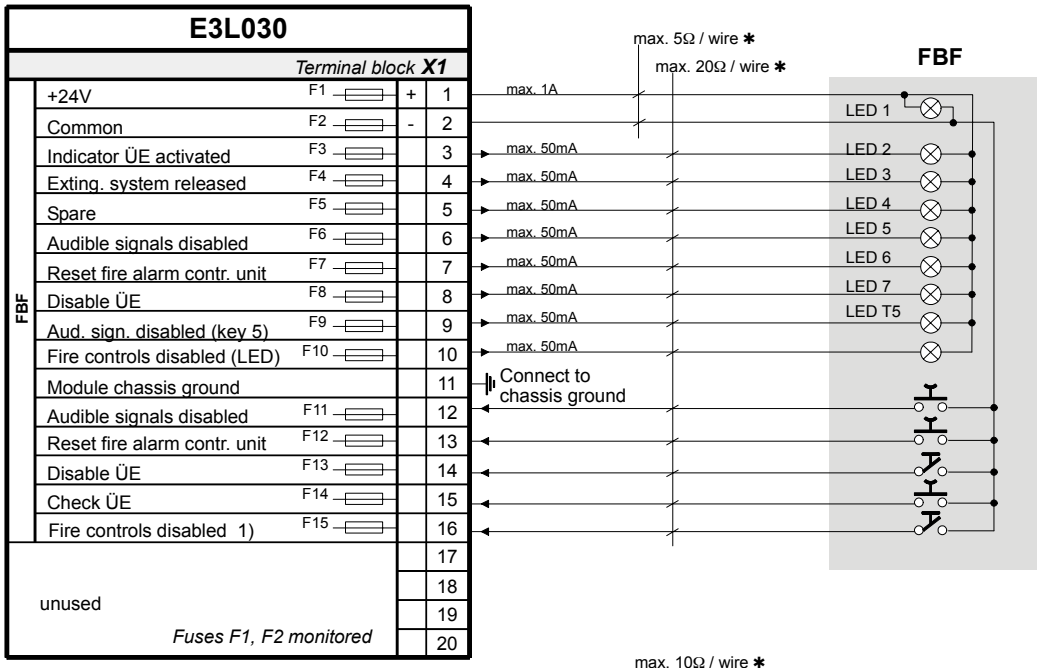

Peripheral equipment outside the control unit housing

✱ Depending on the required length of line, possibly run several wires in parallel

1) applies for control zones with the attribute 'FIRE control zone switching off'

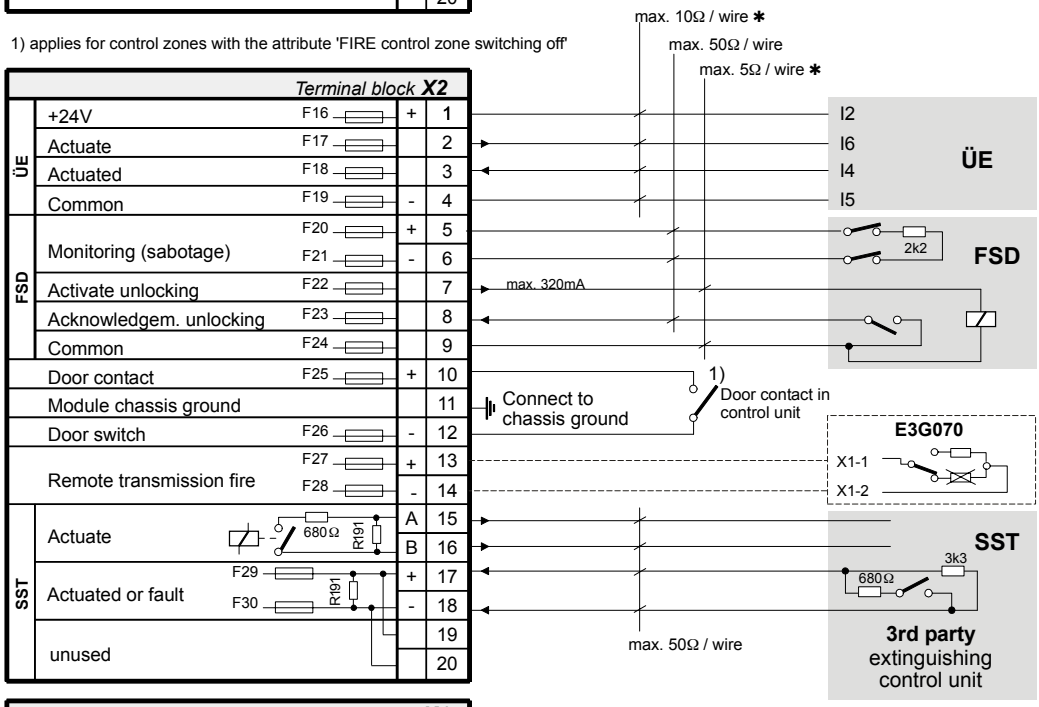

1) If the control unit door is open, the contact must close

(only if several E3G070 are used)

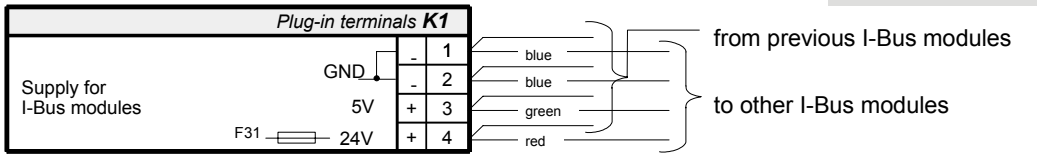

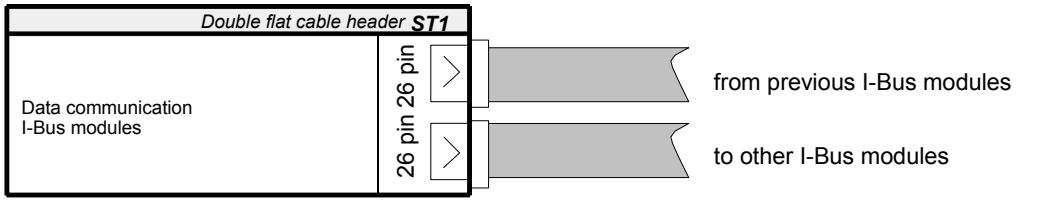

16 E3G050 Control module ”Contacts”

16.1 Overview

- Control module with 8 outputs (volt-free contacts)
- 3 changeover and 5 make contacts
- I-Bus module
- Individual function allocation of the output contacts
- Card format 100mm x 200mm
- I-Bus address is set at programming switch ”S3”

16.2 Key data

Output contacts	8
Contact load	24W / 60VDC 1A
Quiescent current at 24V	10mA

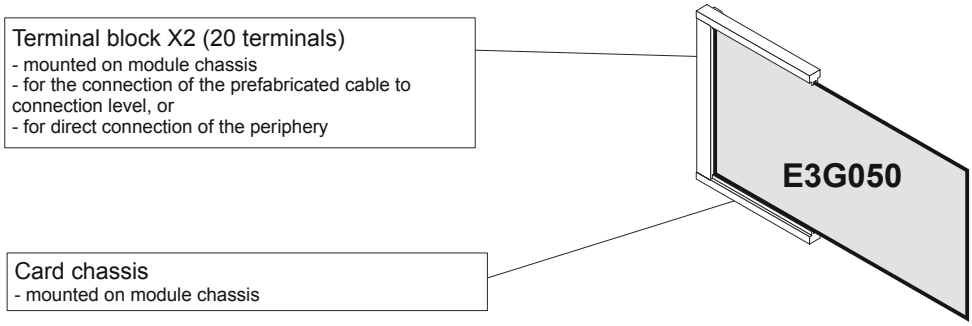

16.3 Important components

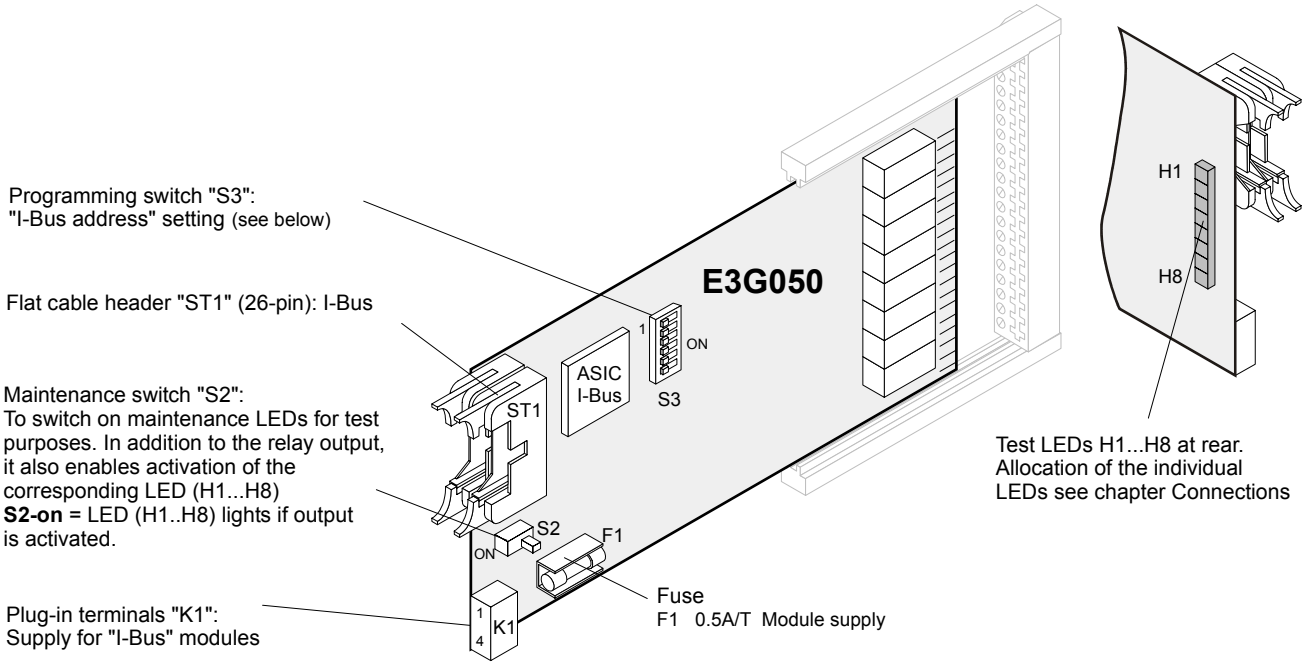

16.4 Programming switch ”S3”

To set I-Bus address. Each element (module) connected to the I-Bus must have an individual address (number). This is set on programming switch ”S3”. Maximum 16 I-Bus devices.

Function / I-Bus address		**Programming switch S3**					
No.		S3-1	S3-2	S3-3	S3-4	S3-5	S3-6
0	Module out of commission (unused)	off	off	off	off	off	off
1	I-Bus user number 1	on	off	off	off	off	off
2	2	off	on	off	off	off	off
3	3	on	on	off	off	off	off
4	4	off	off	on	off	off	off
5	5	on	off	on	off	off	off
6	6	off	on	on	off	off	off
7	7	on	on	on	off	off	off
8	8	off	off	off	on	off	off
9	9	on	off	off	on	off	off
10	10	off	on	off	on	off	off
11	11	on	on	off	on	off	off
12	12	off	off	on	on	off	off
13	13	on	off	on	on	off	off
14	14	off	on	on	on	off	off
15	15	on	on	on	on	off	off
16	16	off	off	off	off	on	off

”S3-1...6” are set to ”off” at the factory

16.5 Connections

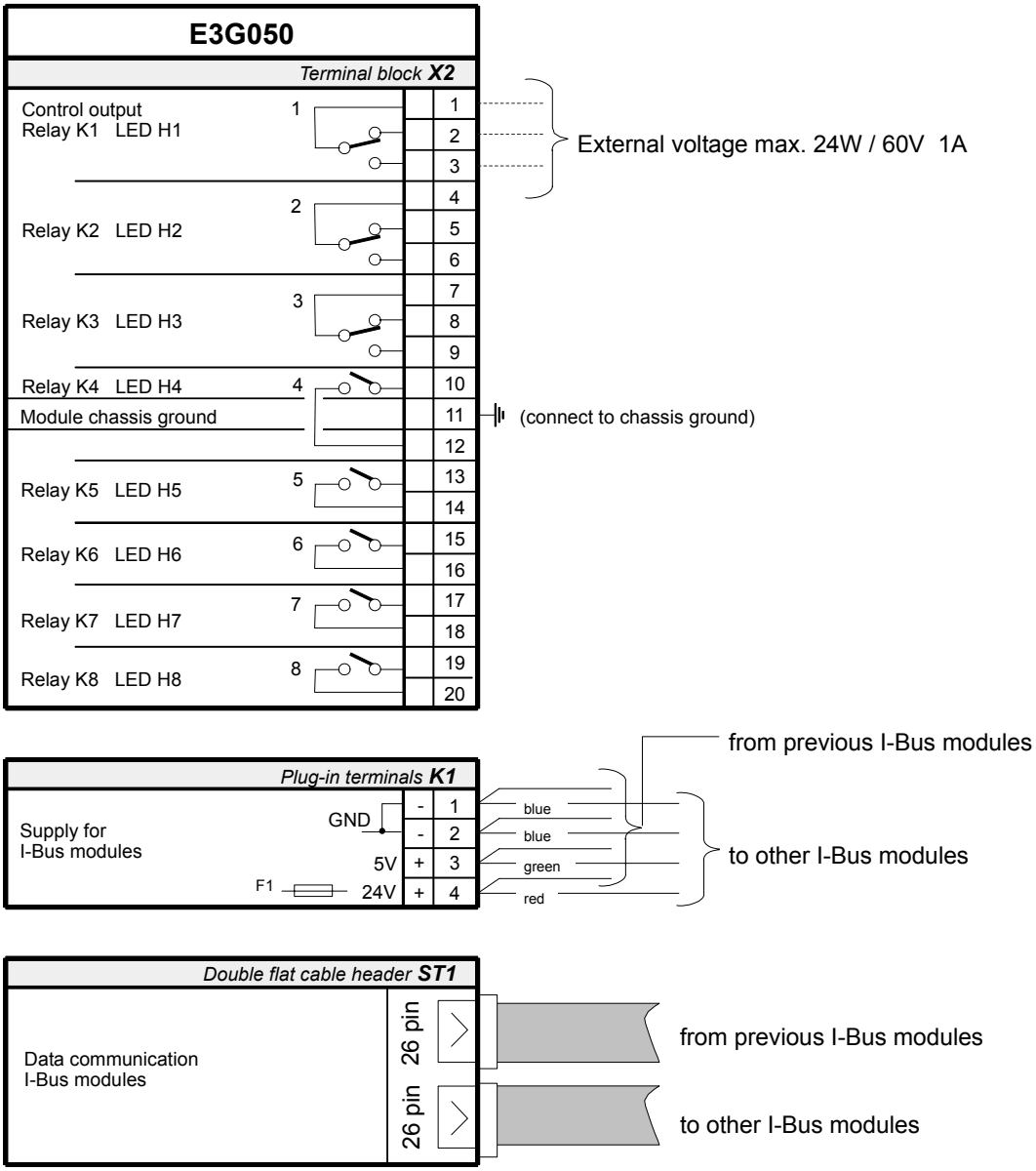

17 E3G060 Control module ”Monitored”

17.1 Overview

- Control module for monitored alarm devices
- 6 monitored control lines 24V 2A with EMI and over voltage protection
- Individual allocation of control lines via maintenance PC (SWE700A)
- It is possible to specify separately whether or not each line must be activated in ”Emergency alarm” mode (programming switch ”S6”)
- Drive horns by internal or external oscillator (intermitted Horn output)
- Max. 8 x E3G060 cards per system (synchronized over plug-in terminal K2)
- Ground fault monitoring, detected via E3G070 (for application details see chapter 6)
- Card format 100mm x 200mm
- I-Bus address is set at programming switch ”S3”

17.2 Application

– The E3G060 module is required in systems with more than 2 monitored control lines for alarm / or similar equipment
– The current on one control line may not exceed 2A; however, the total current for all 6 control lines may not exceed 4A (internal supply K1).

17.3 Key data

Control outputs	number	6
	max. load	2A each at 20.. 30V; total 4A (internal supply, K1) 2A each at 24V[1]; total 12A (external supply, K3)
	termination resistor	4.75kΩ
Quiescent current at 24V		25mA (no control line active)

[1] output at same voltage range as from the external supply (K3)

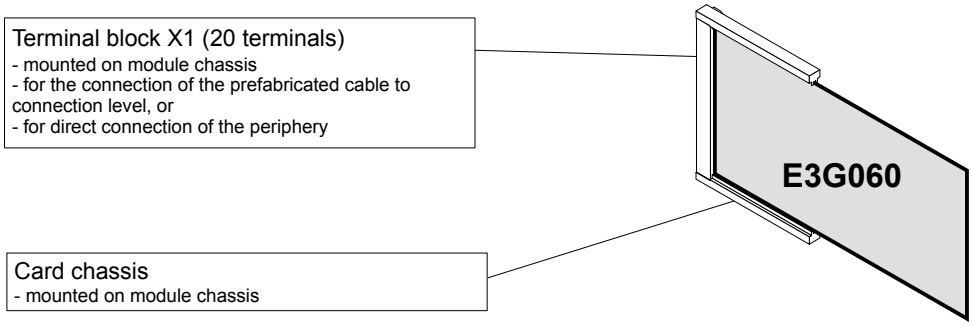

17.4 Important components

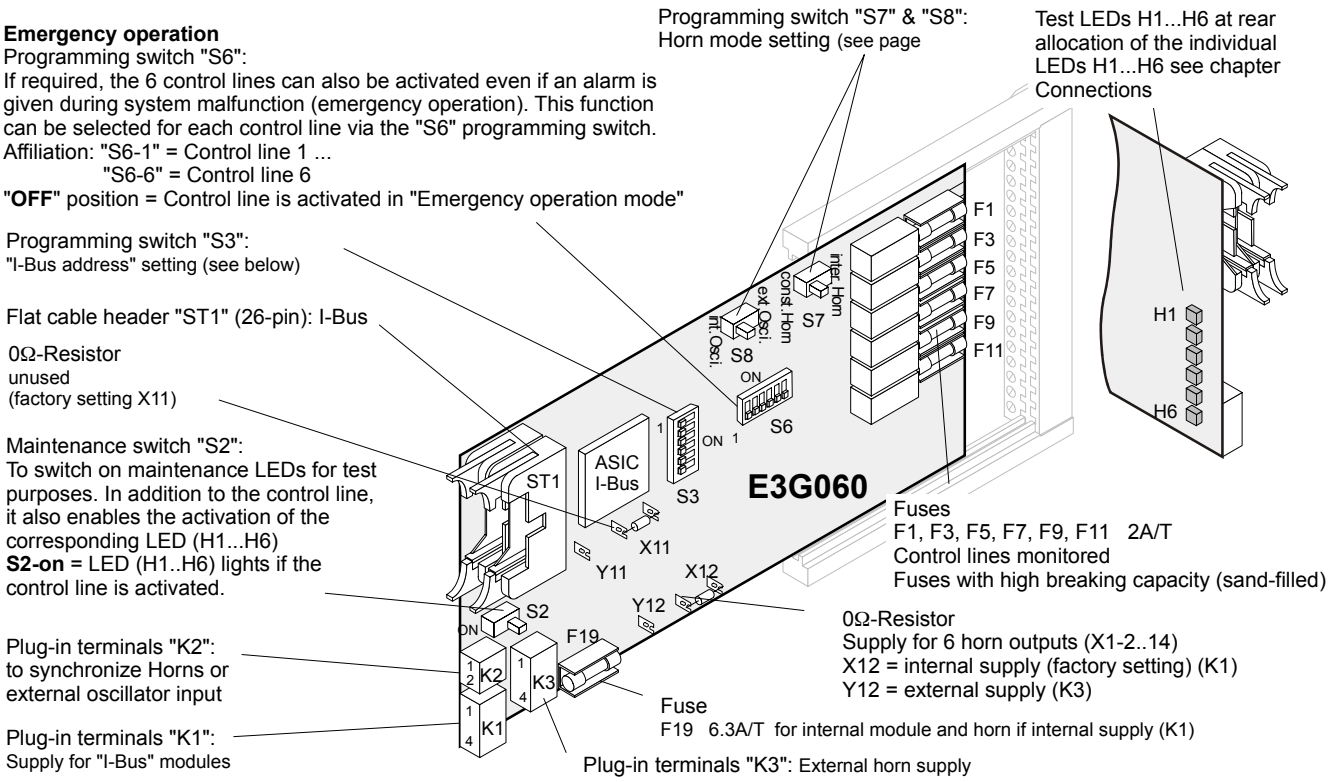

17.5 Programming switch ”S3”

To set I-Bus address. Each element (module) connected to the I-Bus must have an individual address (number). This is set on programming switch ”S3”. Maximum 16 I-Bus devices.

Function / I-Bus address		**Programming switch S3**					
No.		S3-1	S3-2	S3-3	S3-4	S3-5	S3-6
0	Module out of commission (unused)	off	off	off	off	off	off
1	I-Bus user number 1	on	off	off	off	off	off
2	2	off	on	off	off	off	off
3	3	on	on	off	off	off	off
4	4	off	off	on	off	off	off
5	5	on	off	on	off	off	off
6	6	off	on	on	off	off	off
7	7	on	on	on	off	off	off
8	8	off	off	off	on	off	off
9	9	on	off	off	on	off	off
10	10	off	on	off	on	off	off
11	11	on	on	off	on	off	off
12	12	off	off	on	on	off	off
13	13	on	off	on	on	off	off
14	14	off	on	on	on	off	off
15	15	on	on	on	on	off	off
16	16	off	off	off	off	on	off

”S3-1...6” are set to ”off” at the factory

17.6 Programming switches ”S7” & ”S8”

To set horn mode:

Function	Programming switches S7	S8
Constant horn output (factory setting)	const. horn	int. osci
Intermitted horn output for all horns with internal oscillator (1sec. on / 1sec. off) Horns driven by other E3G060 cards can be synchronized, by through contacting K2 plug contacts	int. horn	int. osci
External oscillator input to drive all horns in intermitted mode with external oscillator	int. horn	ext. osci
Not used	const. horn	ext. osci

Notes:
Switch ”S7” defines global horn mode for all horn outputs. Invert this mode (constant / intermitted) individually for each horn output by connecting common (X1-1) with corresponding control input (X1-15.. 20).

17.7 Connections

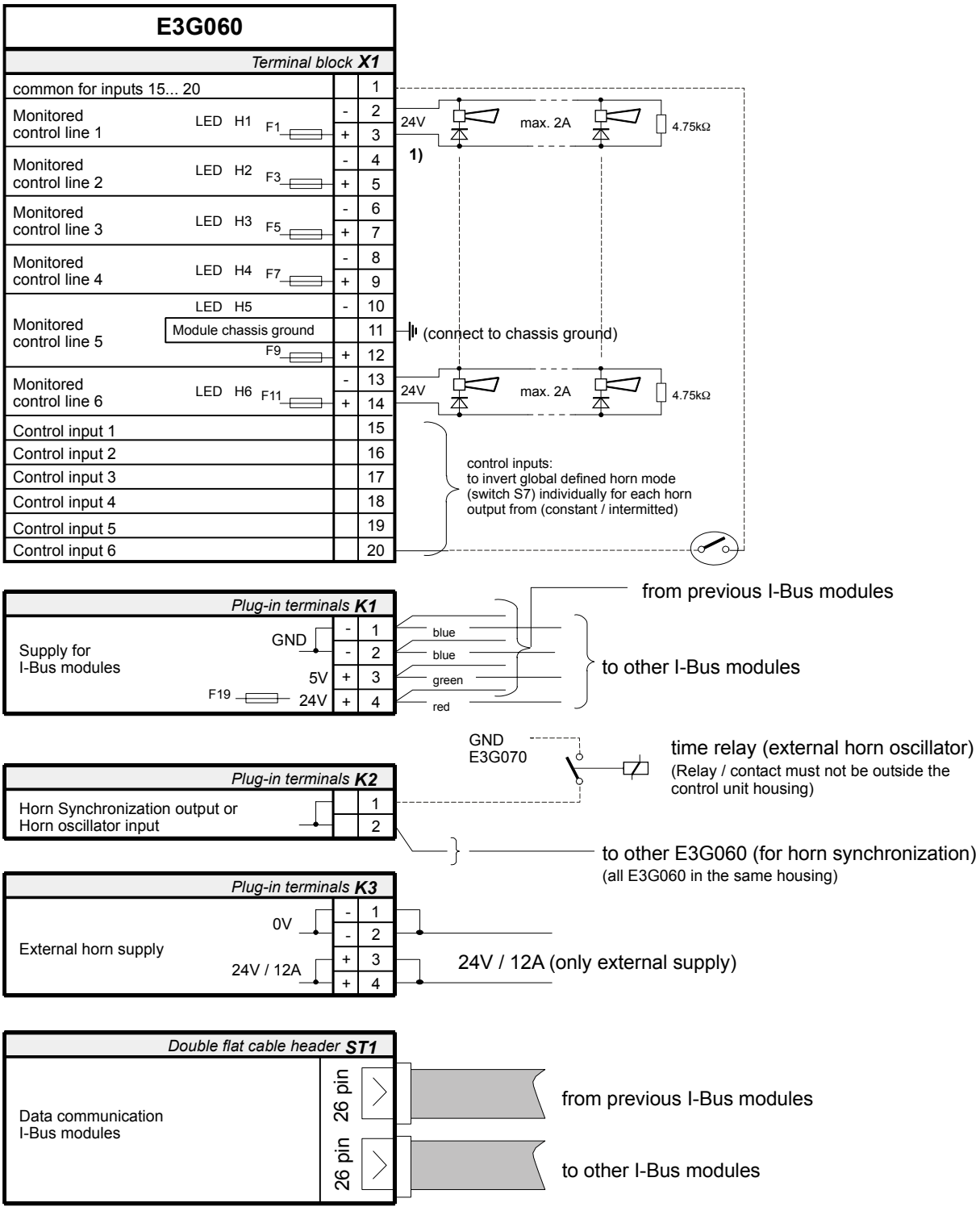

1) The indicated polarity at the terminals 2...14 applies to the active state

18 E3G070 Control module ”Universal”

18.1 Overview

- Universal control module
- 2 contacts for remote transmission ”Alarm and fault”
- 2 monitored control lines for alarm devices with EMI and over voltage protection
- 7 programmable control outputs / inputs
- Monitored supply output for internal devices
- Integrated ground fault monitoring
- Card format 100mm x 200mm
- I-Bus address is set at programming switch ”S3”

18.2 Key data

”Remote transmission” contacts	max. load type	24W (60V 1A), choice of make / break contact
”Alarm horn line”	max. load	2A (24V), with EMI protection
Inputs	max. load activation	40mA (24V), internal only via volt-free contact
Supply output	max. load	630mA (24V), internal only
Quiescent current at 24V		25mA

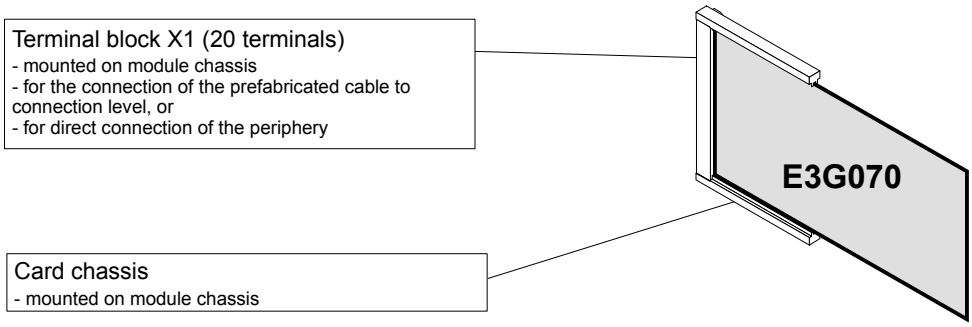

18.3 Important components

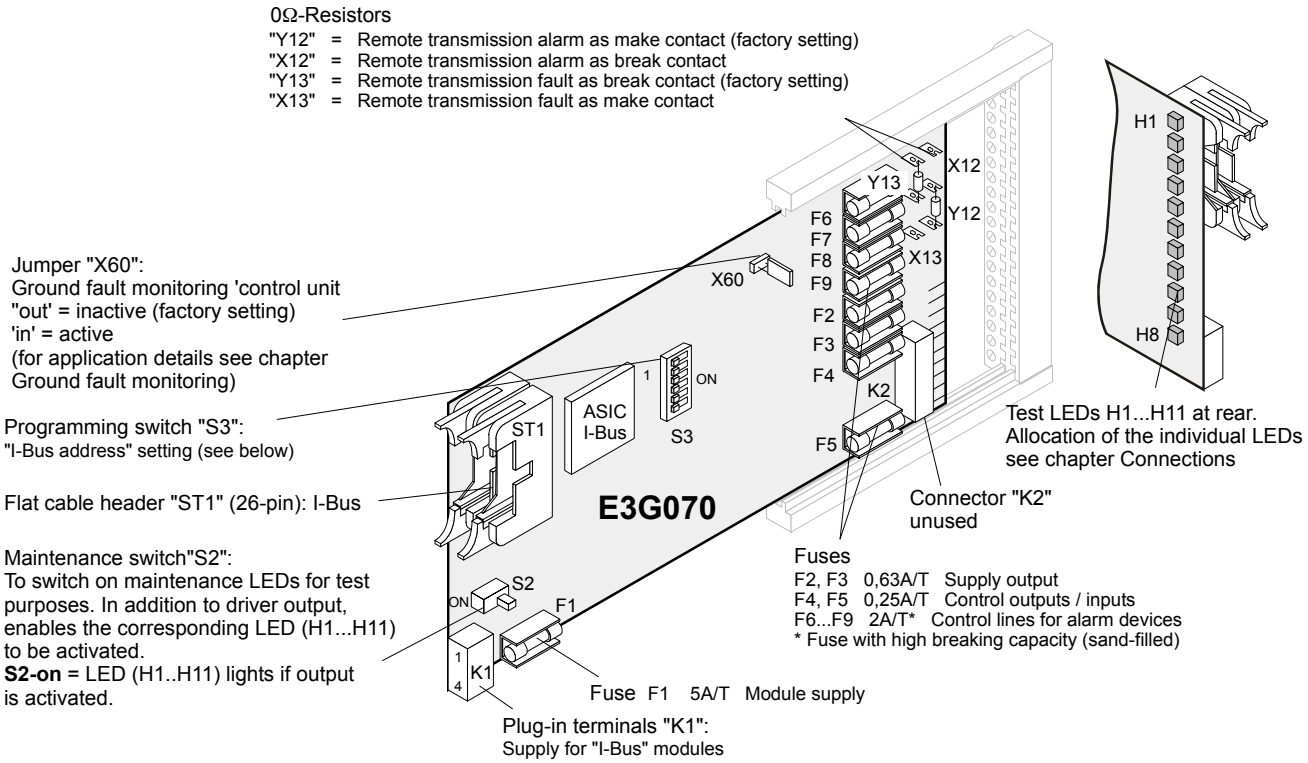

18.4 Programming switch ”S3”

To set I-Bus address. Each element (module) connected to the I-Bus must have an individual address (number). This is set on programming switch ”S3”. Maximum 16 I-Bus devices.

Function / I-Bus address		**Programming switch S3**					
No.		S3-1	S3-2	S3-3	S3-4	S3-5	S3-6
0	Module out of commission (unused)	off	off	off	off	off	off
1	I-Bus user number 1	on	off	off	off	off	off
2	2	off	on	off	off	off	off
3	3	on	on	off	off	off	off
4	4	off	off	on	off	off	off
5	5	on	off	on	off	off	off
6	6	off	on	on	off	off	off
7	7	on	on	on	off	off	off
8	8	off	off	off	on	off	off
9	9	on	off	off	on	off	off
10	10	off	on	off	on	off	off
11	11	on	on	off	on	off	off
12	12	off	off	on	on	off	off
13	13	on	off	on	on	off	off
14	14	off	on	on	on	off	off
15	15	on	on	on	on	off	off
16	16	off	off	off	off	on	off

”S3-1...6” are set to ”off” at the factory

The I-Bus address setting is given as default by the tool (SWE700A) as address 15, therefore the programming switch 'S3' of the E3G070 must be set accordingly.

18.5 Connections

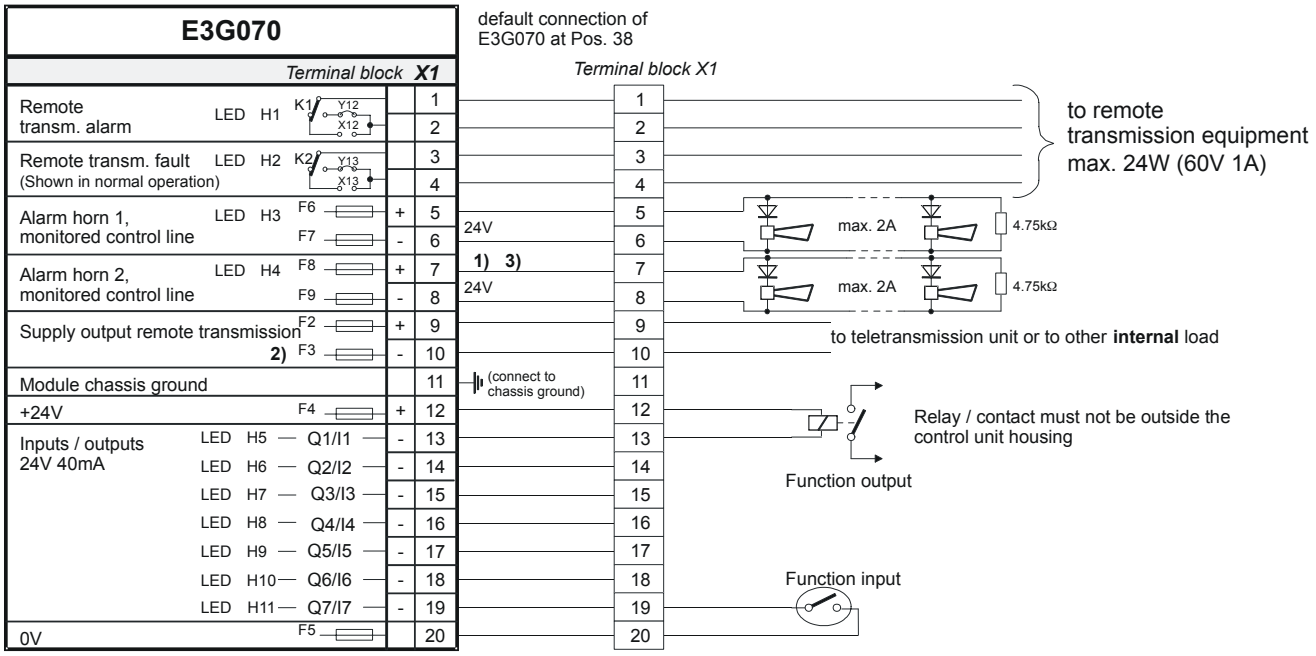

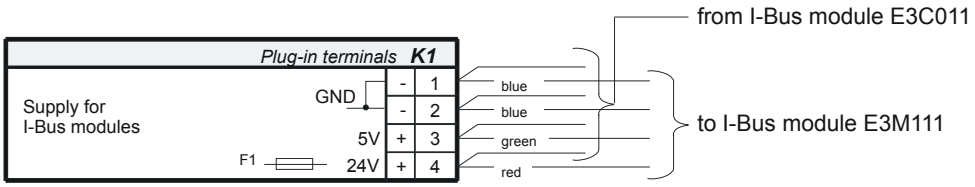

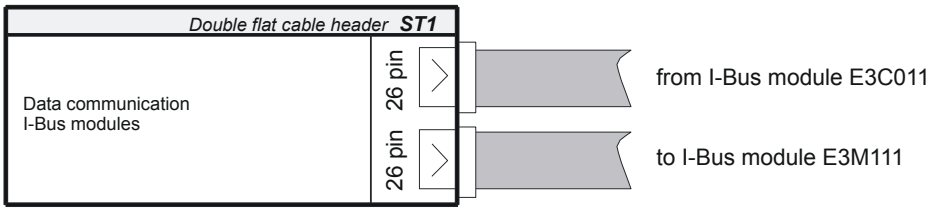

1) The indicated polarity at the terminals 5...8 applies to the active state
2) The output X1-9,10 is always monitored
3) Terminate not used horn lines with a 4,75kΩ resistor

19 Z3B171 Relay module

- Interface (potential isolation) to fire doors, ventilation system etc.
- Activated via driver outputs E3G070 (Q1...Q7) or E3L020
- Contains 1 changeover contact 250VAC / 10A
- Latched on to extruded section
- Quiescent current 33mA at 29,6V (27mA at 24V)

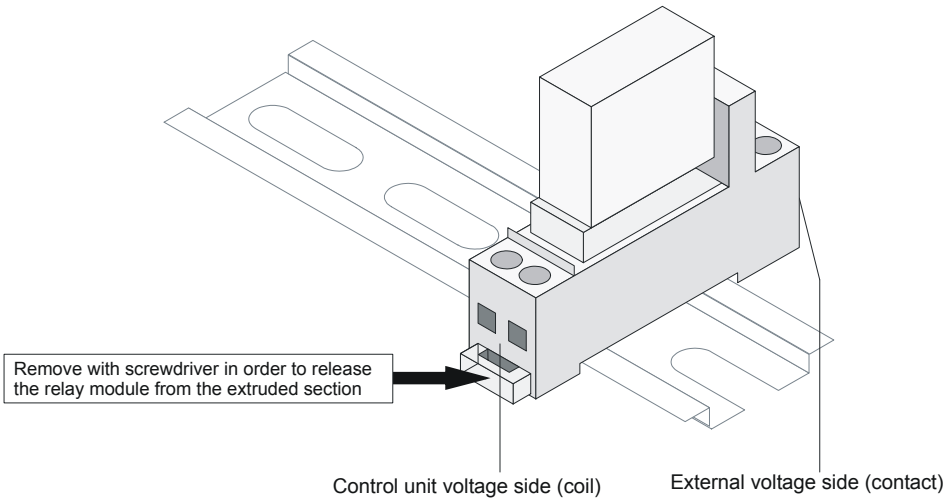

19.1 Connections

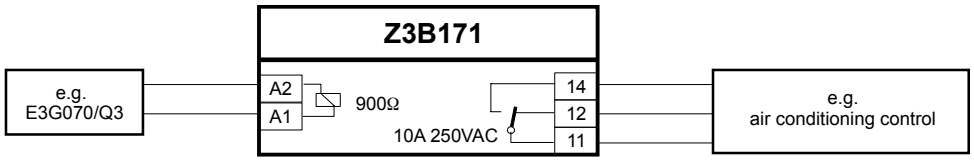

Terminal layout

20 B3Q700 Control terminal to FC/FT

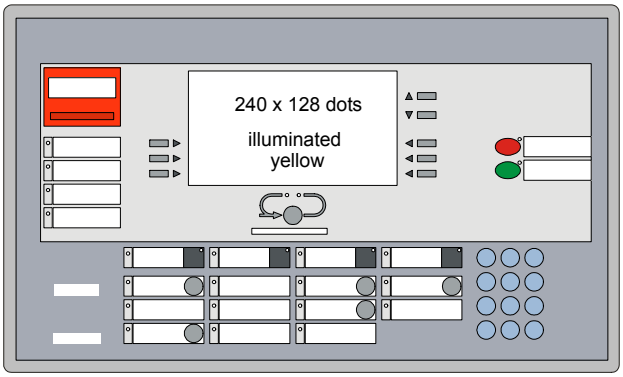

Notes:

- Operation and designation of indicators, see document no. 007835
- Details for ordering see document no. 007836 ’Planning’
- Principle of the insertable inscription strips see page 77

20.1 Overview

- Control terminal for the fire control unit **FC700A**
- Becomes at the same time used as ’main-CPU’
- For full system operating
- Can be used for **single** or **multi** AREA operating
- Emergency operating facility integrated
- Flash-ROM 2MBx8Bit as program memory, programming via Flash-Tool (PC)
- SRAM for user data and standard text
- Selectable ground fault monitoring, detected via control module E3G070 (for application details see chapter 6)
- Operating access via password and/or key switch (option)
- Insertable inscription strips in different languages
- To be built into the housing of the control unit or remote located in separate housing

20.2 Key data

Operating voltage	18...45VDC
Quiescent current (illumination of the LCD inactive)	100mA (24V)
Alarm current	330mA (24V)
Maximum current (LCD backlight active + lamp test)	420mA (24V)

20.3 Application

- Remote location:
  - 24V supplied from the control unit
- According to application choose the corresponding Flash program file:

Terminal	Utilisation as	
	Control terminal 'FT700A'	**Control terminal and main CPU combined 'FC700A'**
B3Q700	FT700A-1 -> CTY00760 international 1)	FC700A-1 -> CIY00760 international
1) Default programming at factory by using it as spare part for FC700A, the file CIY00760 must be downloaded.		

The Flash program files are available from the Hotline.

20.4 Functions

Interfaces
- C-Bus → Plug-in terminals 'K5'
- I-Bus → Connector 'ST1'
- 2 x RS232 → Connector 'ST2'
- Parallel indicator panel B3R051, Mimic Display Board K3R072 → Connector'ST4'
- Emergency operation circuit → Plug-in terminals 'K6'

Control inputs
- External key switch (see Operation enabled)
- Monitoring of autonomous power supply
- Monitoring of Plexiglas door (open / closed)

Operation enabled
- This is normally done via password at the keyboard
- An integrated key switch, (photoelectric) is available as an option, which can also be used to lock the Plexiglas door (if used).
- Operation can also be enabled by an external key switch

20.5 Mechanical design

- Front panel with foil and integrated keyboard
- Inscription with insertable inscription strips
- Electronics shielded by metal cover
- Key switch (option) to lock the Plexiglas door (can also be used to enable operation)

Mounting see document no. 007827

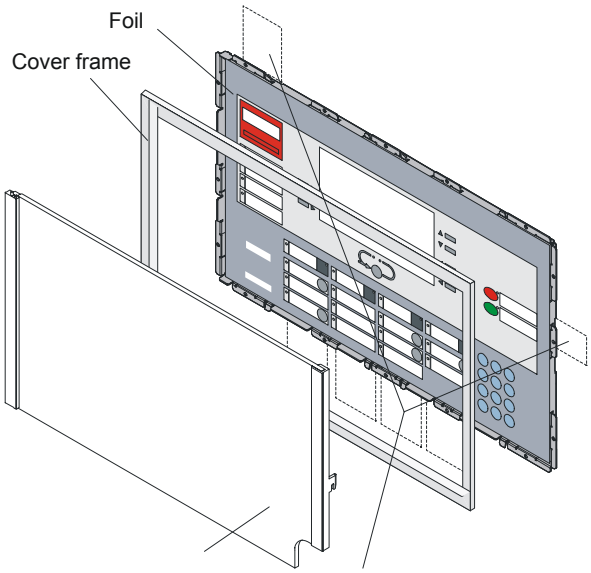

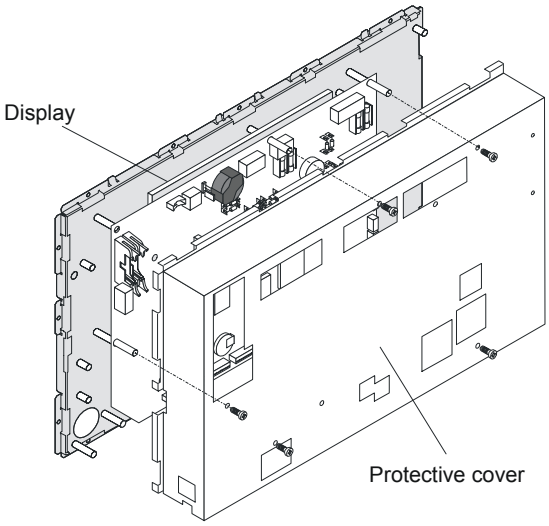

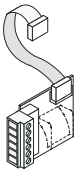

Adapter Z3I530, flat cable -> terminals:
Connection **outside** housing to the
parallel indicator panel B3R051 etc.

20.6 Important components

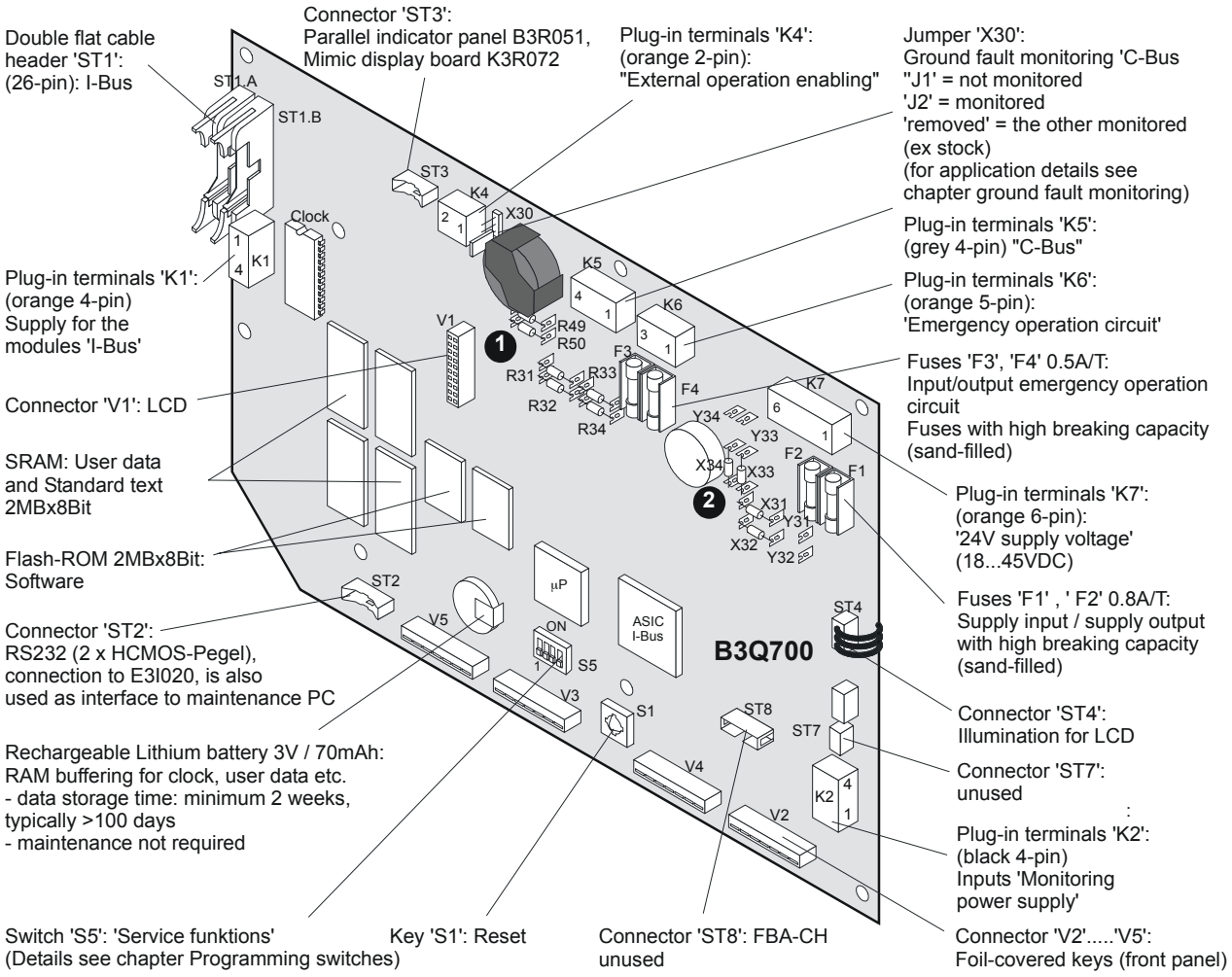

❶ Resistors to modify the C-Bus impedance:	Position	Impedance value **110Ω**, e.g. for G51 0.6Ø	Impedance value **50Ω**, e.g. for MICC
	R49 / 50	**402Ω**	182Ω
	R31 / 32 / 33 / 34	**110Ω**	49.9Ω

Impedance adaptation only required if C-Bus line is > 100m. For other impedance values than 110Ω or 50Ω consult document 007836

❷ Programming of terminals 'K7':	Use of B3Q700	0Ω–Resistors
	"FT" + supply from control unit (Input)	X31 + X32 + X33 + X34
	"FC" + autonomous supply (Output)	Y31 + Y32 + Y33 + Y34

➔ If the control terminal B3Q700 is used as replacement for FC700A -> change the 0Ω–Resistors from pos. X31…..X34 to pos. Y31….Y34

20.7 Programming switch ’S5’

’S5-1...4’ are set to ”off” at the factory.		
S5-1	on	Maintenance mode: Blocks all control outputs
	off	Normal operation
S5-2	off	Event memory, normal mode
	on	Event memory, freeze current contents
S5-3	off	Unused
S5-4	off	Flash programming disabled
*	on	Flash programming enabled (function for production und service engineer only)

*) Carry out a CPU reset (switch ’S1’) after each switch over of ’S5-4’.

20.8 Connections

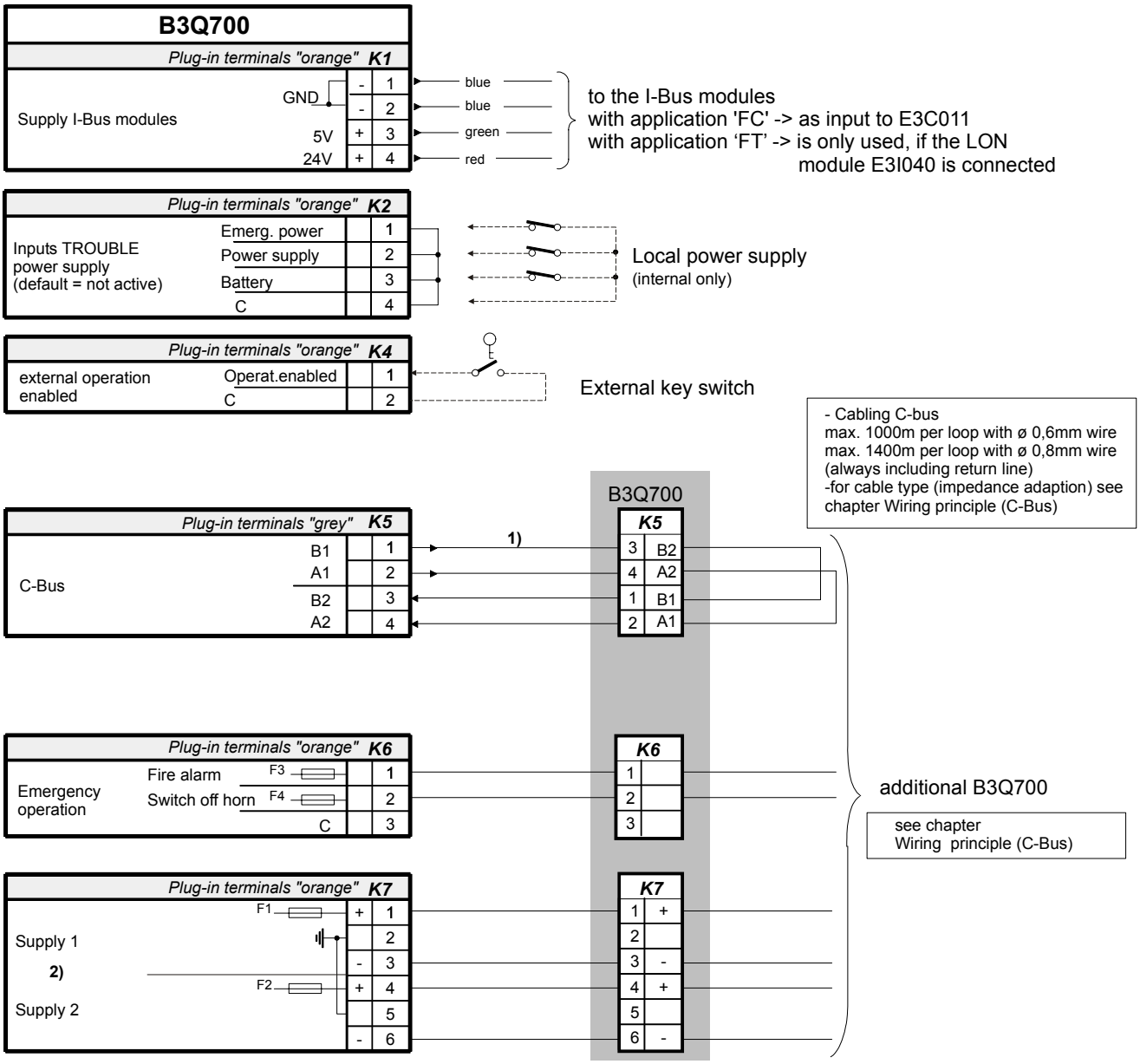

1) C-Bus must **always** be wired as a loop line if more then one C-Bus participants are connected
2) Configuration as in-/or output see jumpers X31, X32, X33, X34, Y31, Y32, Y33, Y34 on table in chapter important components

20.9 Connectors

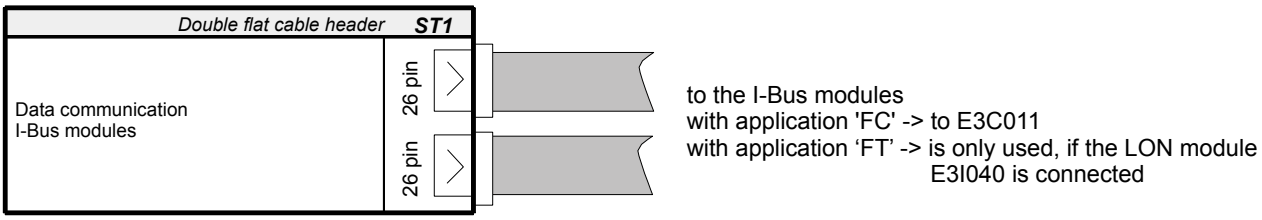

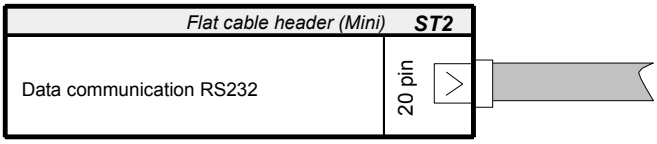

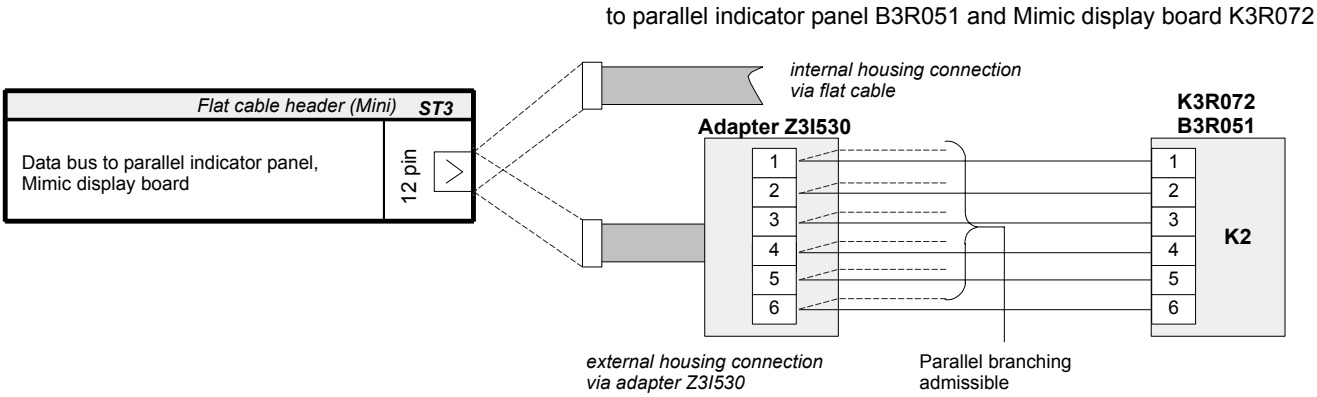

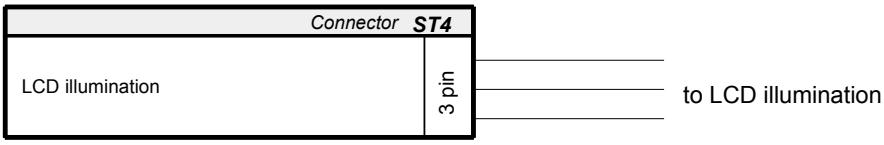

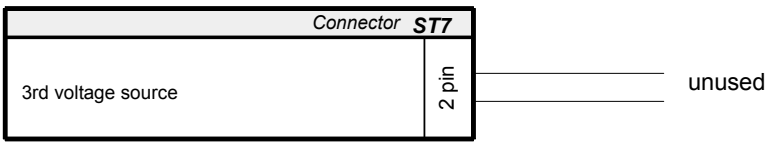

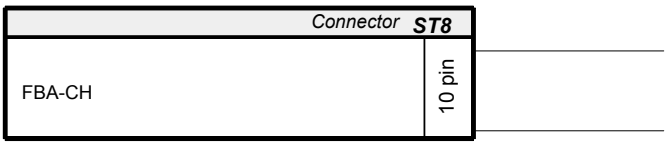

21 B3R051 Parallel indicator panel

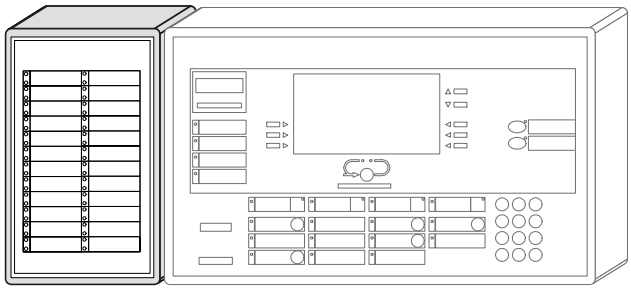

B3R051 B3Q700

Notes

- Templates for inscription strips see document 007894

21.1 Overview

- Option to control terminal B3Q700 or to LON/Mimic Display converter K3I050
- Allows additional display fields
- Unit with 2 x 12 display fields each with a red and yellow LED
- Individual allocation of individual display fields
- Max. 24 units, however max. 8 addresses
- Communication is via a special serial bus
- Line and device **not** monitored
- ”Lamp test” is contained in the menu function of control terminal B3Q700

21.2 Application

Installation

The parallel indicator panel B3R051 fits in the following housings:

– Control unit housing FC700A
– Plastic housing ”small” H23G220 (1x B3R051)
– Housing H28G200 with cover H28T110 for 1x B3R051 and B3Q700
with cover H28T120 for 4x B3R051

Positioning

– Immediately next to the control terminal B3Q700 or up to 1000m away in a separate housing

21.3 Key data

Operating voltage		9...45VDC
Current consumption	at 24V	quiescent 40mA max. 140mA
	at 9V	quiescent 80mA max. 330mA
	at 45V	quiescent 30mA max. 90mA

21.4 Wiring principle

Control terminal and parallel indicator panel in immediate vicinity

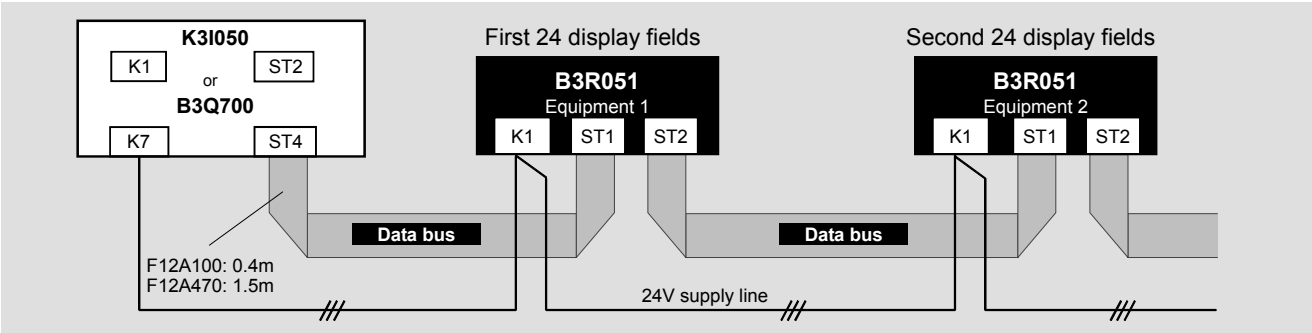

Parallel indicator panel separate from control terminal

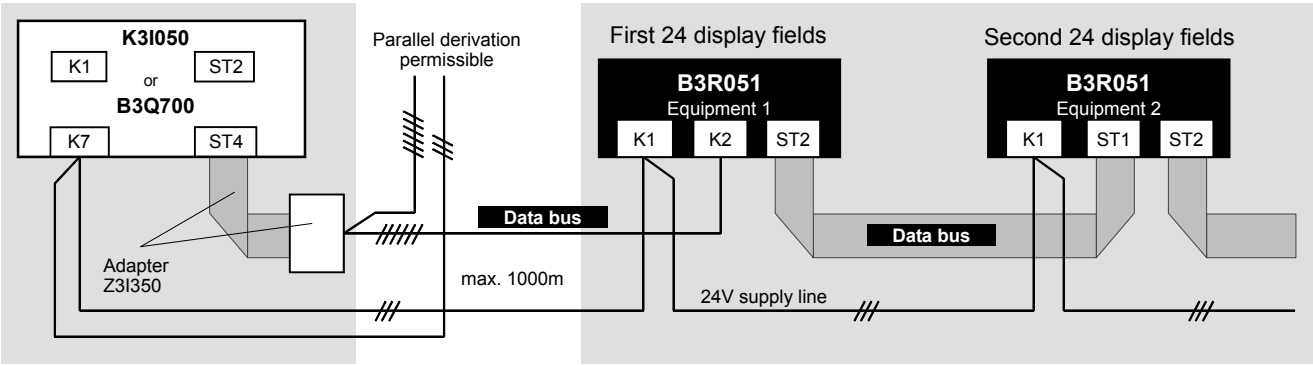

Note:
- max. 24 units B3R051 or K3R072 (also mixed) possible with max. 8 different addresses
- remove resistor array (see page 83) except on **one** unit

21.5 Mechanical design

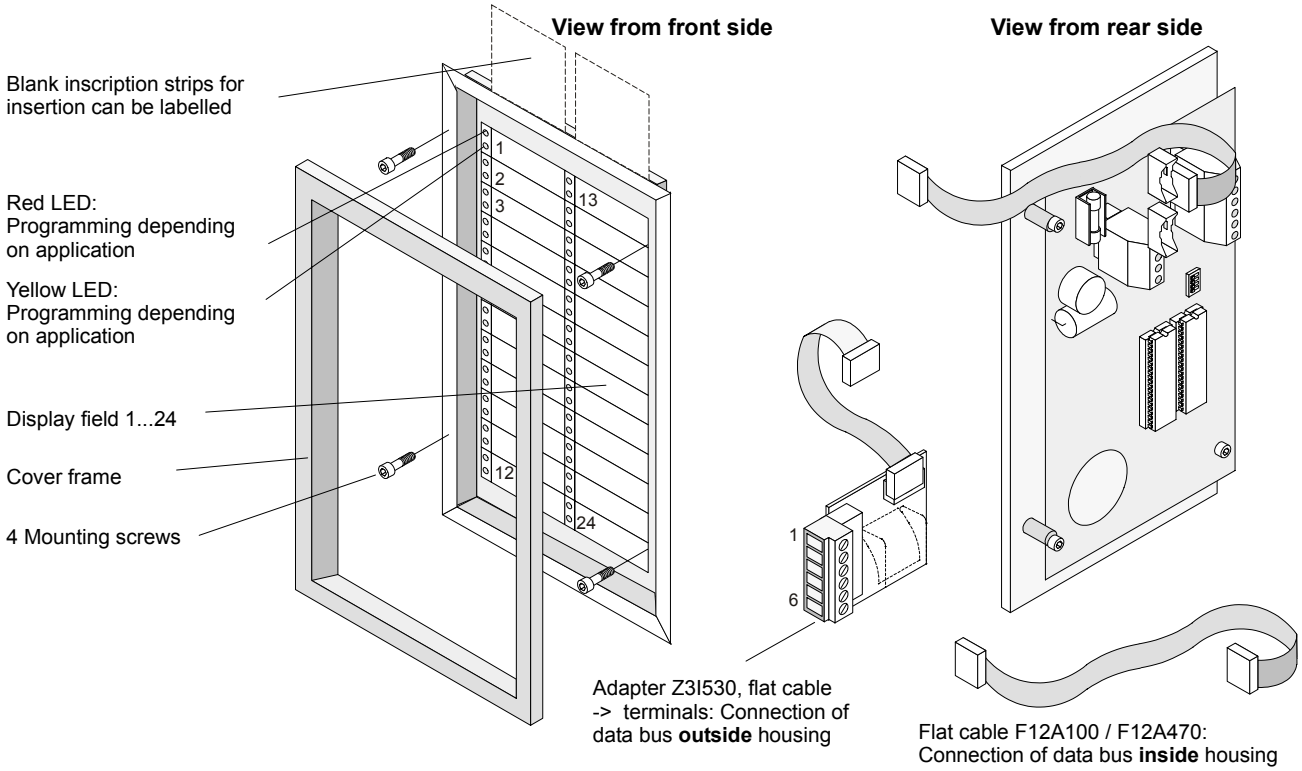

21.6 Important components

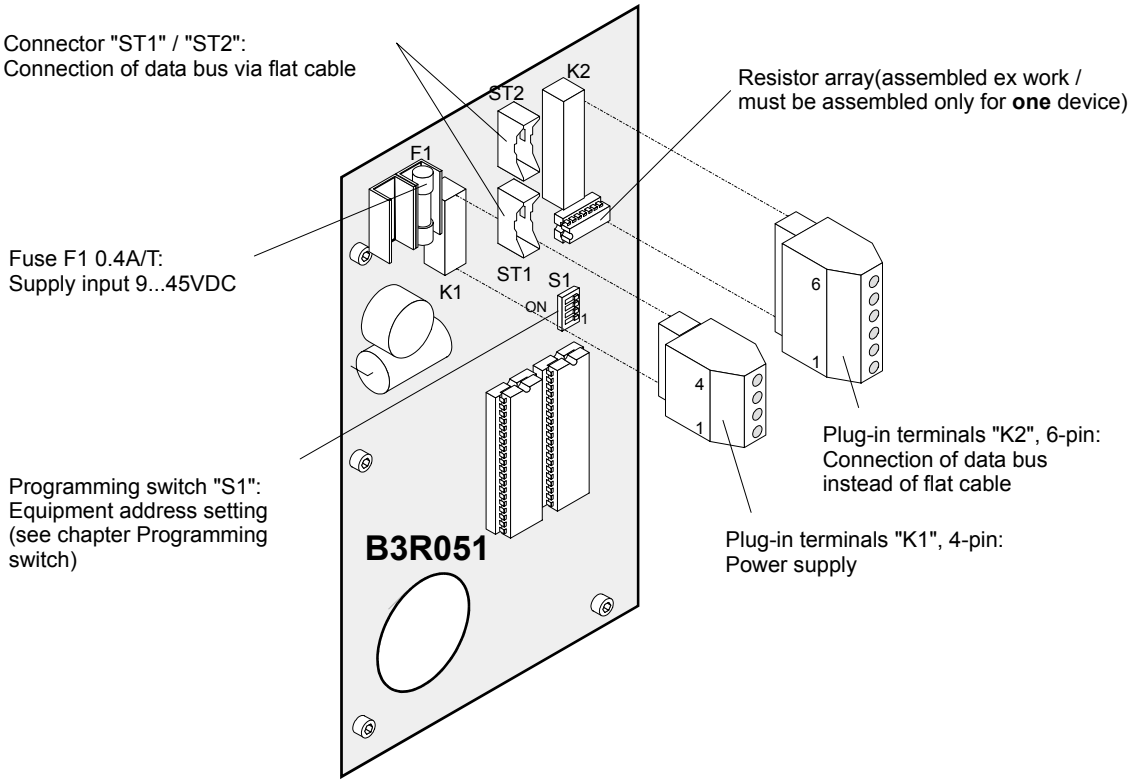

21.7 Programming switch ”S1”

To set equipment address.

Function No.			Programming switch S1 S1-1	S1-2	S1-3	S1-4
0	Test procedure	In this setting all LEDs are activated alternating between even and uneven numbers.	off	off	off	off
1	Equipment address	1	on	off	off	off
2		2	off	on	off	off
3		3	on	on	off	off
4		4	off	off	on	off
5		5	on	off	on	off
6		6	off	on	on	off
7		7	on	on	on	off
8		8	off	off	off	on

”S1-1...4” are set to ”off” at the factory

21.8 Connections

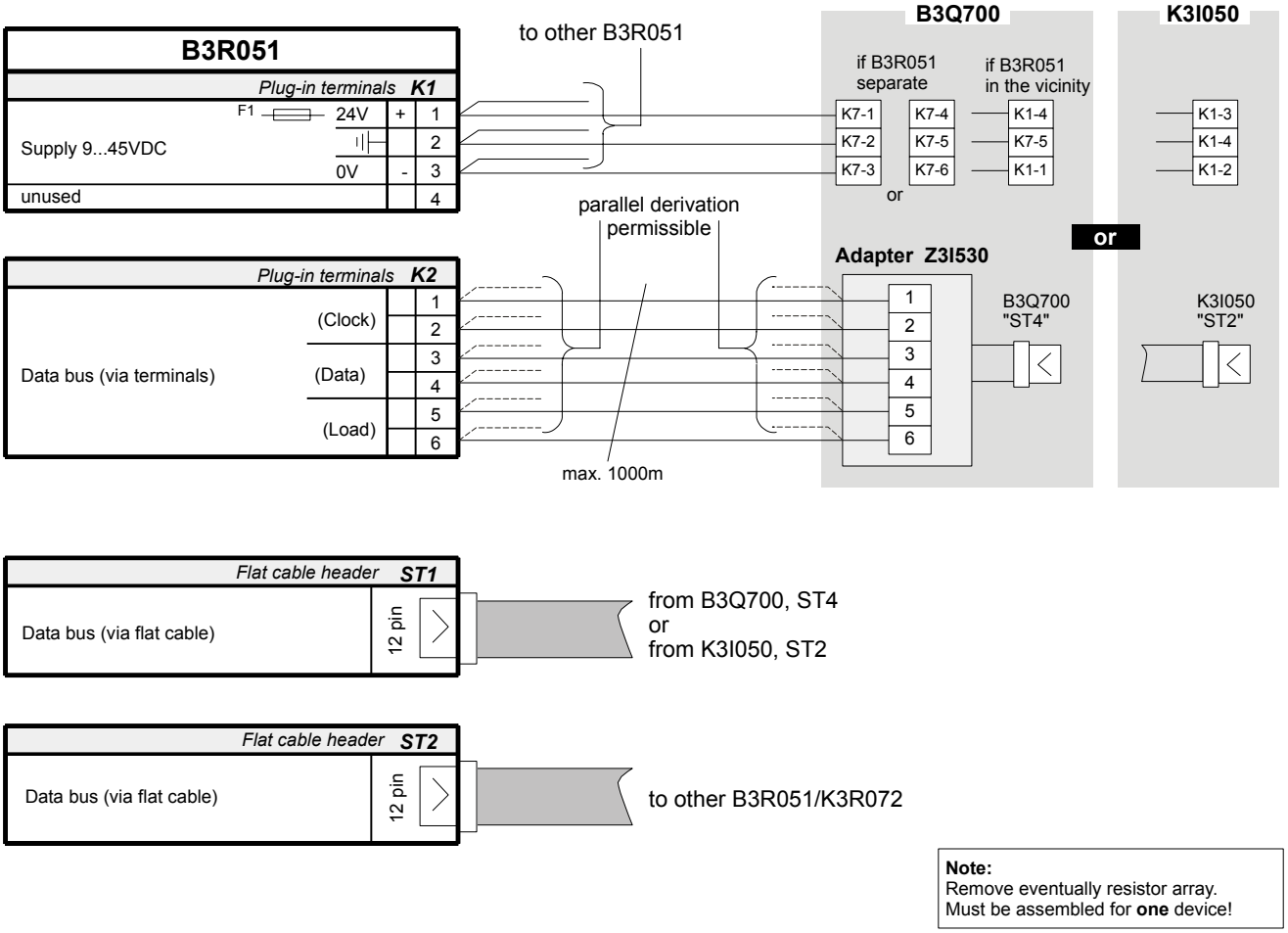

Note:
Remove eventually resistor array.
Must be assembled for **one** device!

22 K3R072 Mimic Display board

22.1 Overview

- Option to control console B3Q700, or to LON/Mimic Display converter K3I050
- 2x24 outputs for LED activation for Mimic Display panels, or not monitored relay contacts (K3G060)
- 2 control outputs for local ’Buzzer’ and ’LED operation’
- 2 inputs for ’Switch-off buzzer’ und ’Lamp test’
- The lamp test is integrated in menu function B3Q700
- Individual allocation of the individual outputs
- Max. 24 units, however max. 8 addresses
- Communication is via a special serial bus
- Line and device not monitored

22.2 Application

The Mimic Display board is built into the mimic panel housing.

– Connection to LED via flat cable F50F410 (50-wire, 24 red LEDs, cable length 1m, must be ordered separately)
– The relay card K3G060 can be connected instead of LEDs
– Line length data bus B3Q700 → K3R072 max. 1000m

Connection line

– Data bus: via flat cable or 6-wire cable
– Supply 24V: via 3-wire cable

22.3 Key data

Operating voltage		9...45VDC
Current consumption	at 24V	quiescent 40mA max. 140mA
	at 9V	quiescent 80mA max. 330mA
	at 45V	quiescent 30mA max. 90mA

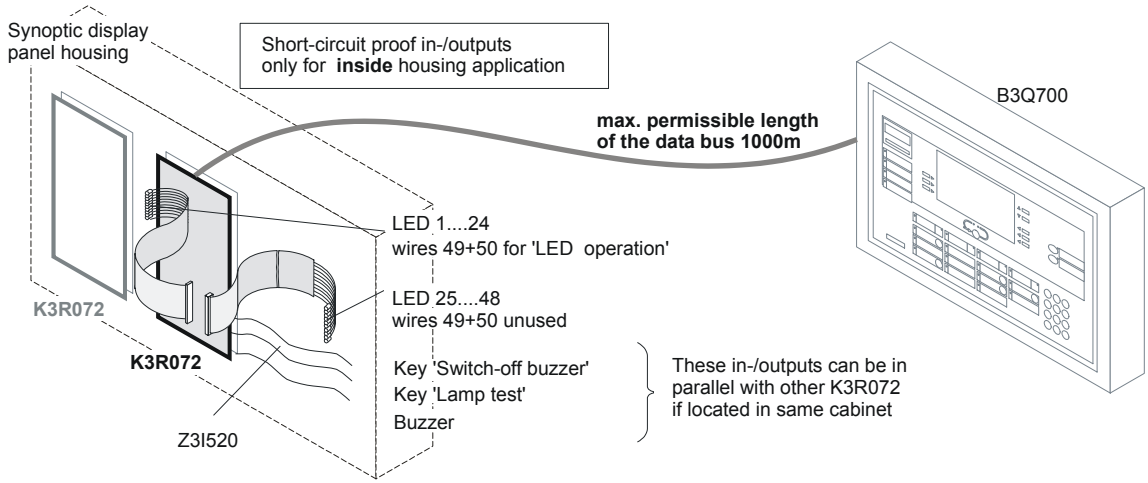

22.4 Wiring principle

Control console and Mimic Display board in the immediate vicinity

Note:
-Max. 24 units B3R051 or K3R072 (also mixed) possible with max. 8 different addresses
-remove resistor array except on **one** unit

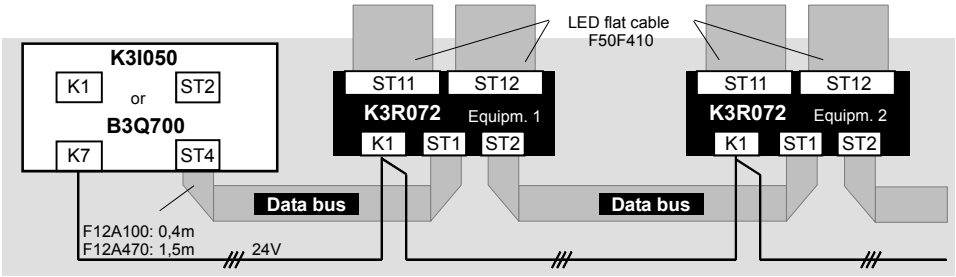

Mimic Display board separate from the control console

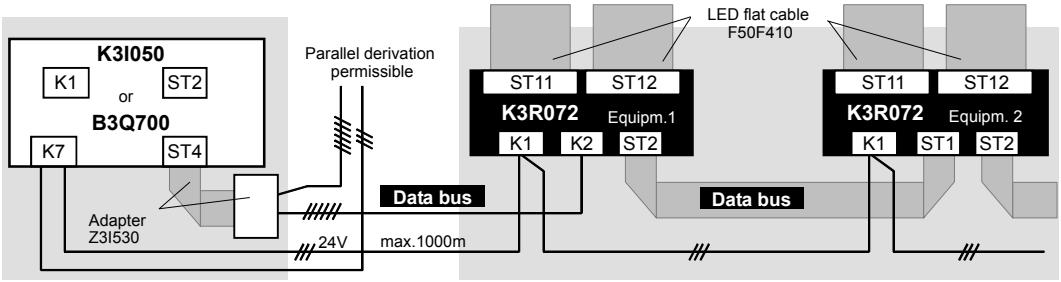

22.5 Mechanical design

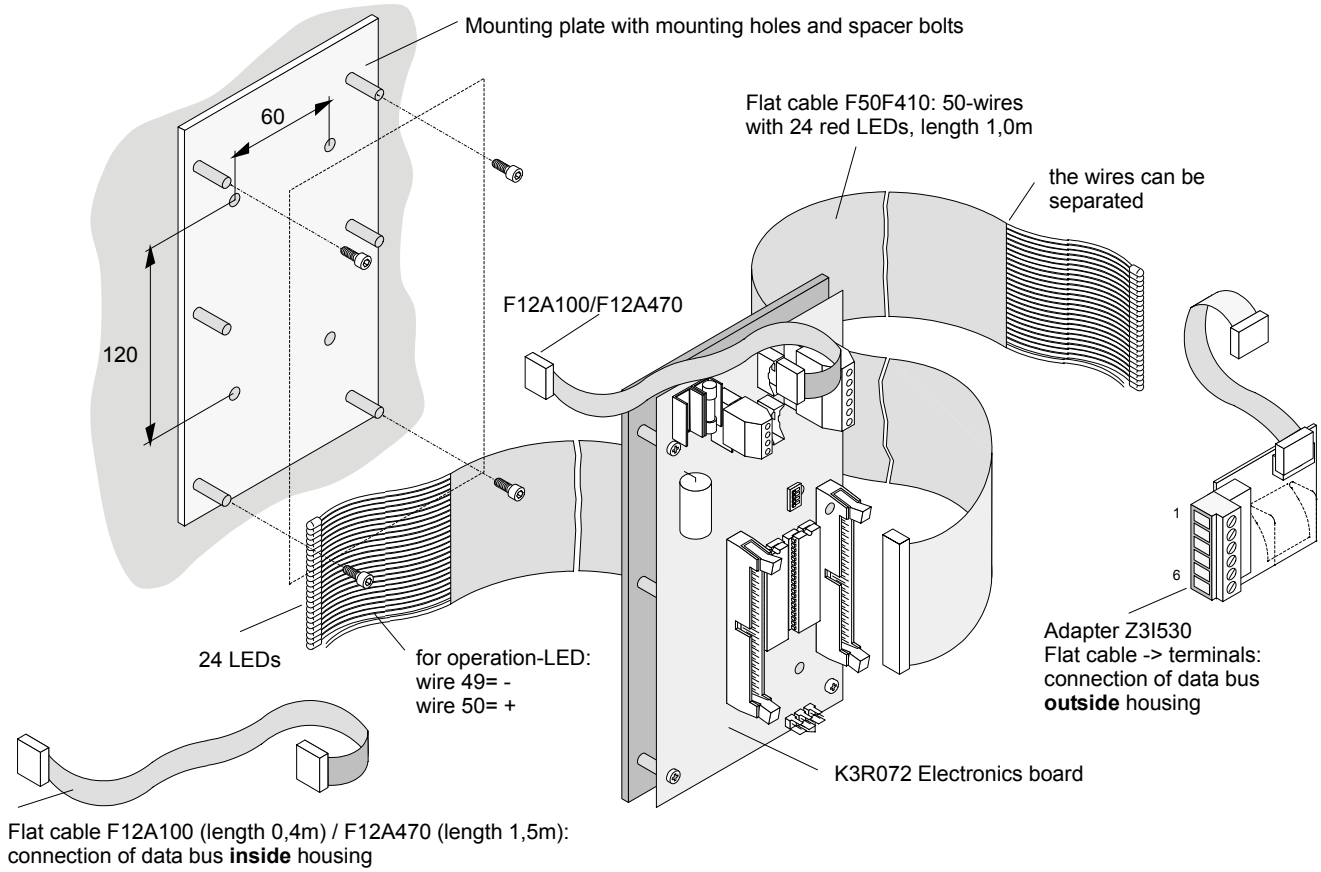

22.6 Important components

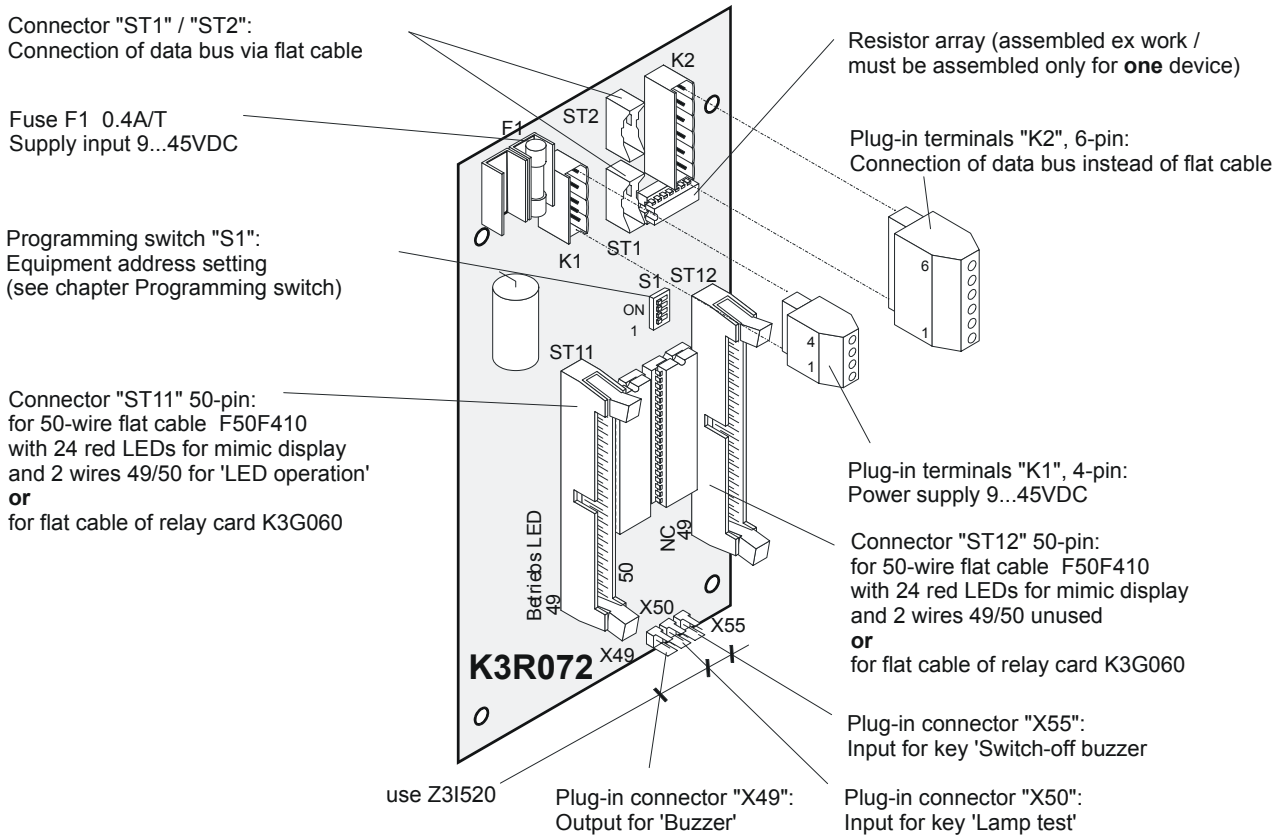

22.7 Programming switch ”S1”

To set equipment address.

Function No.			Programming switch S1 S1-1	S1-2	S1-3	S1-4
0	Test procedure	In this setting all outputs are activated alternating between even and uneven numbers.	off	off	off	off
1	Equipment address	1	on	off	off	off
2		2	off	on	off	off
3		3	on	on	off	off
4		4	off	off	on	off
5		5	on	off	on	off
6		6	off	on	on	off
7		7	on	on	on	off
8		8	off	off	off	on

”S1-1...4” are set to ”off” at the factory

22.8 Connections

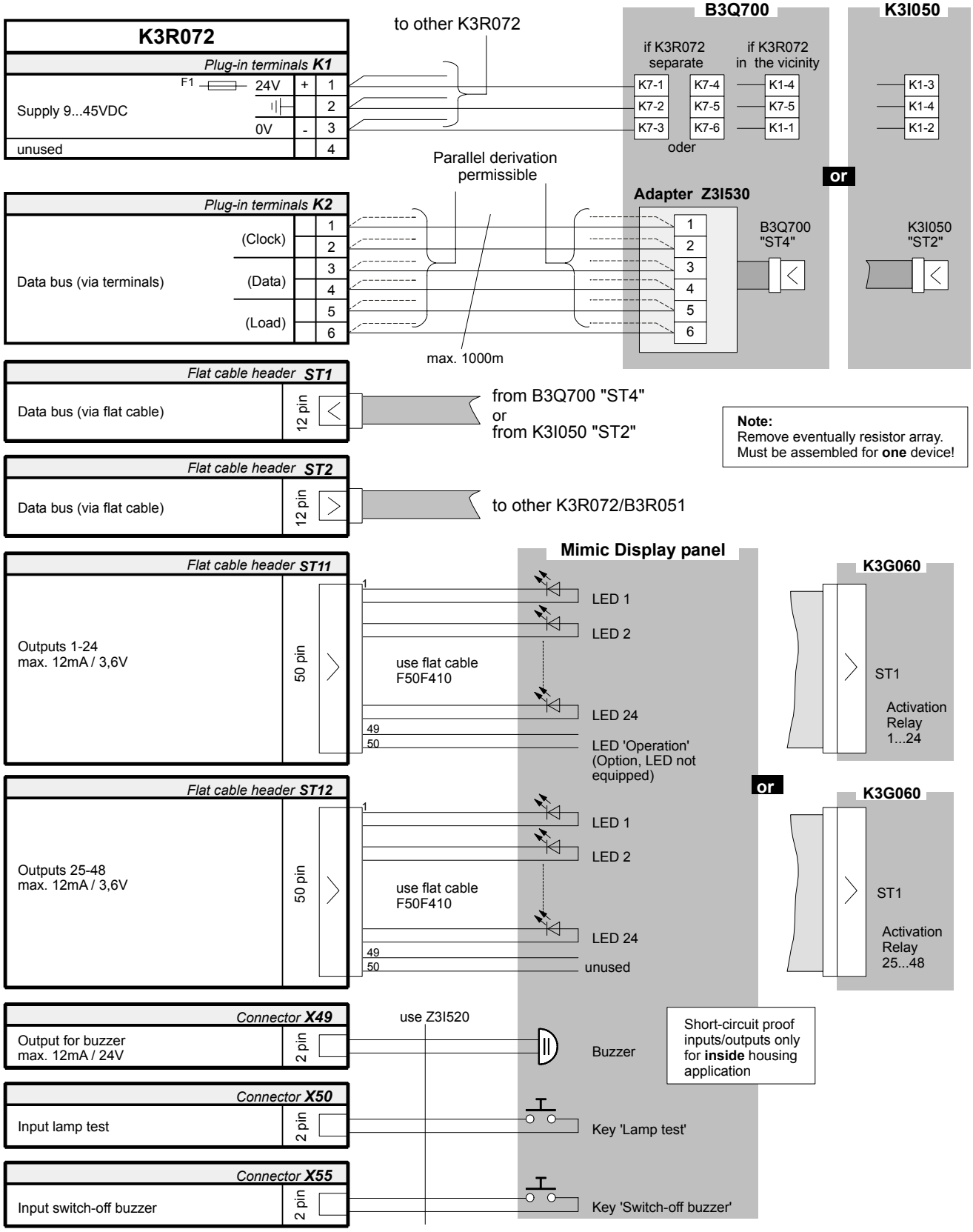

23 K3G060 Relay card

23.1 Overview

- Option to Mimic Display board K3R072
- 2 K3G060 can be connected to each K3R072
- Card **not** monitored
- 24 volt-free relay-make contacts
- Contacts not monitored
- Contacts can be individually connected via jumper to externally supplied V+ or V– potential

23.2 Key data

Operating voltage		9...45VDC
Quiescent current	at 24V	6mA
	at 45V	6mA
all relays de-energized	at 9V	7mA
Max. current	at 24V	90mA
	at 45V	50mA
all relays energized	at 9V	270mA
Relay		24 x 1 NO contact
Contact load		30VDC / 1A

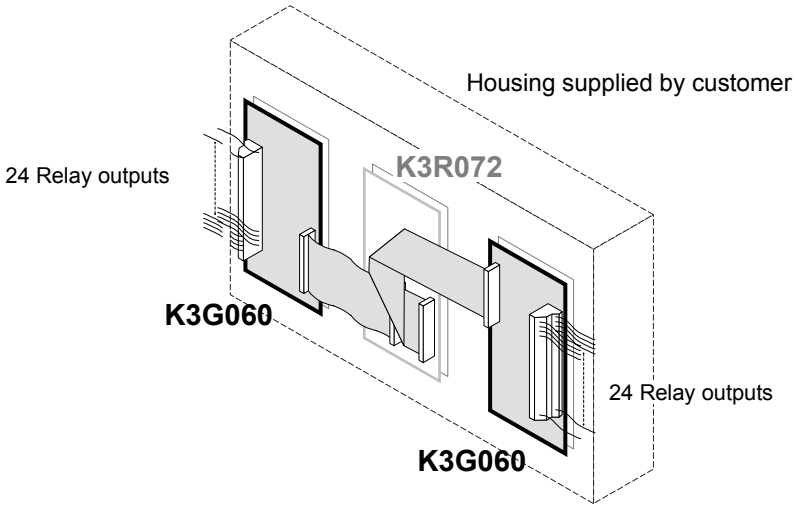

23.3 Wiring principle

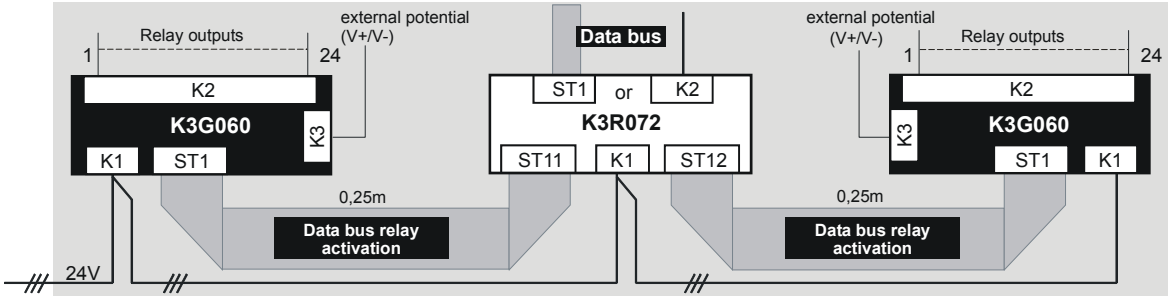

23.4 Mechanical design

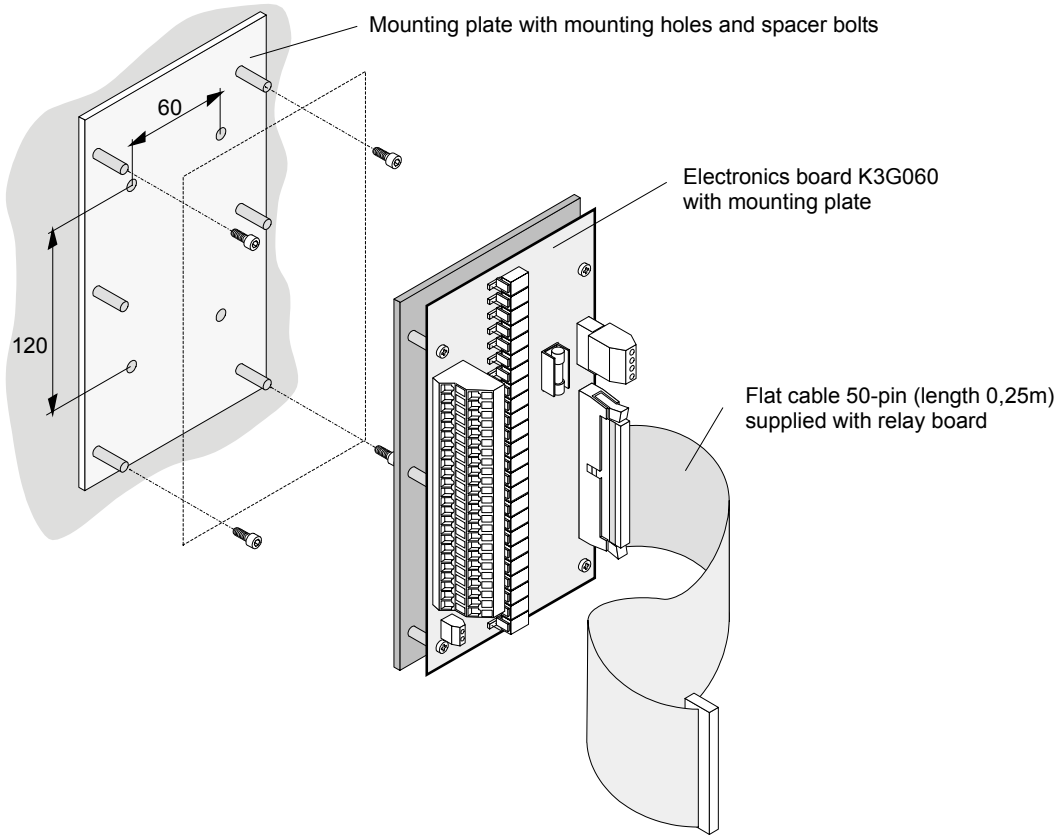

23.5 Important components

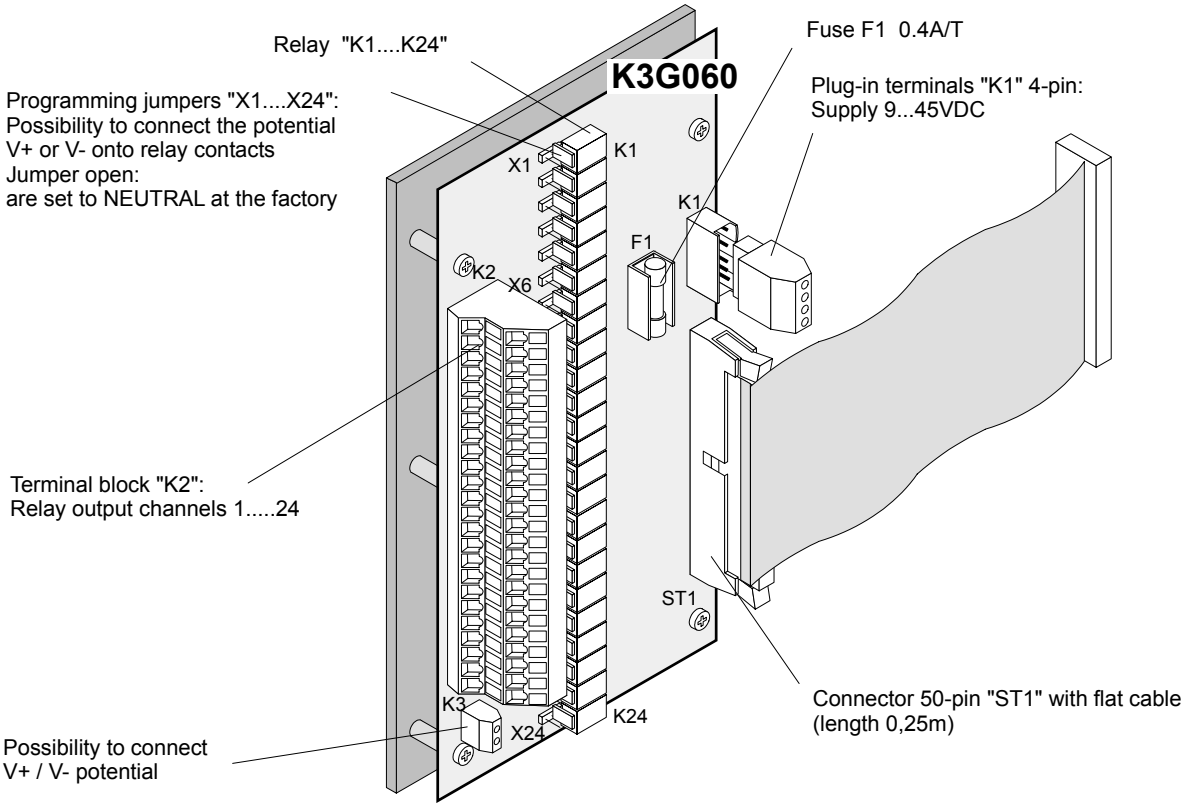

23.6 Connections

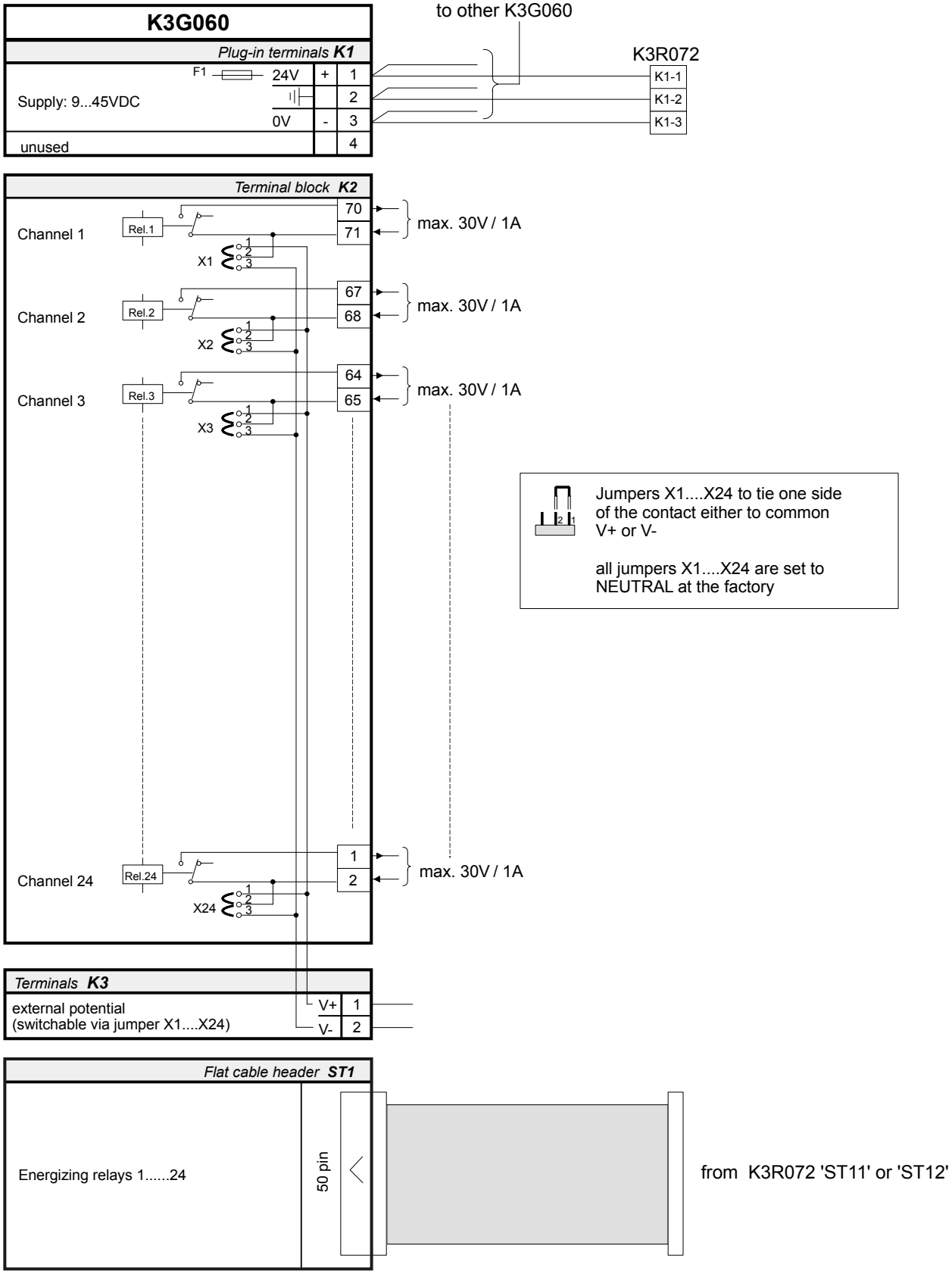

24 K3I050 Mimic Display converter

24.1 Overview

- Convert LON-Bus to Data bus for Mimic Display drivers K3R072 or parallel indicator panels B3R051
- LON-Bus device
- Max. 32 units
- Connectable via flat cable or adapter Z3I530 up to 24 units K3R072 or B3R051, nevertheless max. 8 addresses only
- Inputs for key 'buzzer off' and key 'lamp test'
- Outputs for buzzer and LED 'system on'
- Board format 100mm x 200mm
- Equipped with mounting plate

24.2 Application

– Required to run K3R072 and B3R051 via LON-Bus

24.3 Key data

Operating voltage		9…45VDC
Current consumption	at 24V	quiescent 15mA max. 30mA
	at 45V	quiescent 30mA max. 50mA
	at 9V	quiescent 15mA max. 30mA
Ratings	output buzzer output LED state ON	max. 50mA / 22VDC 3,3VDC / 10mA

24.4 Wiring principle

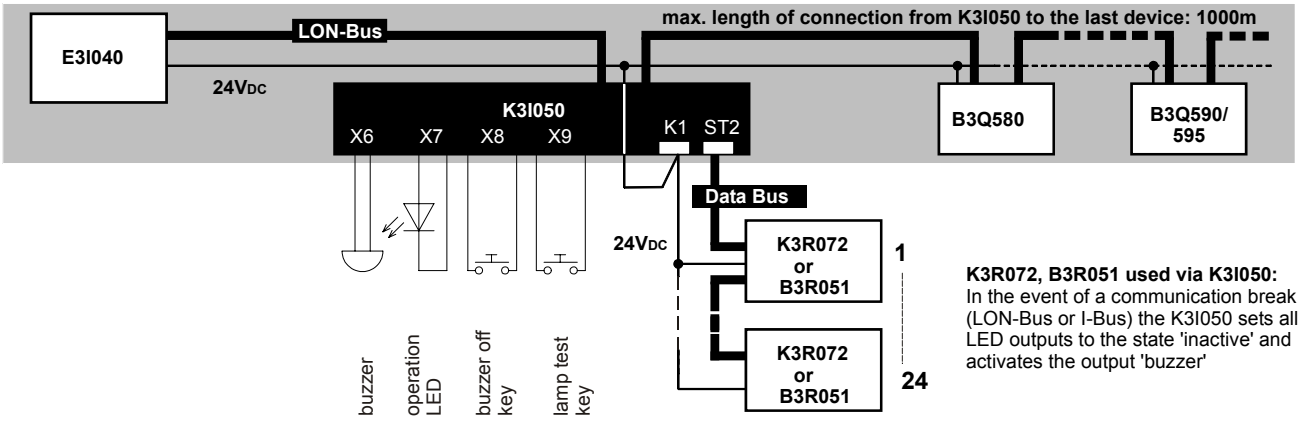

Output 'buzzer'
-active: a) steady if any LED output within the K3R072, B3R051 is initiated
b) intermittent in case of a communication break
-remains active until input 'buzzer OFF' is activated or the cause for a) or b) no longer exists

Input 'lamp test'
-activates all LED outputs within the K3R072, B3R051 for apprx. 2 sec.

24.5 Mechanical design

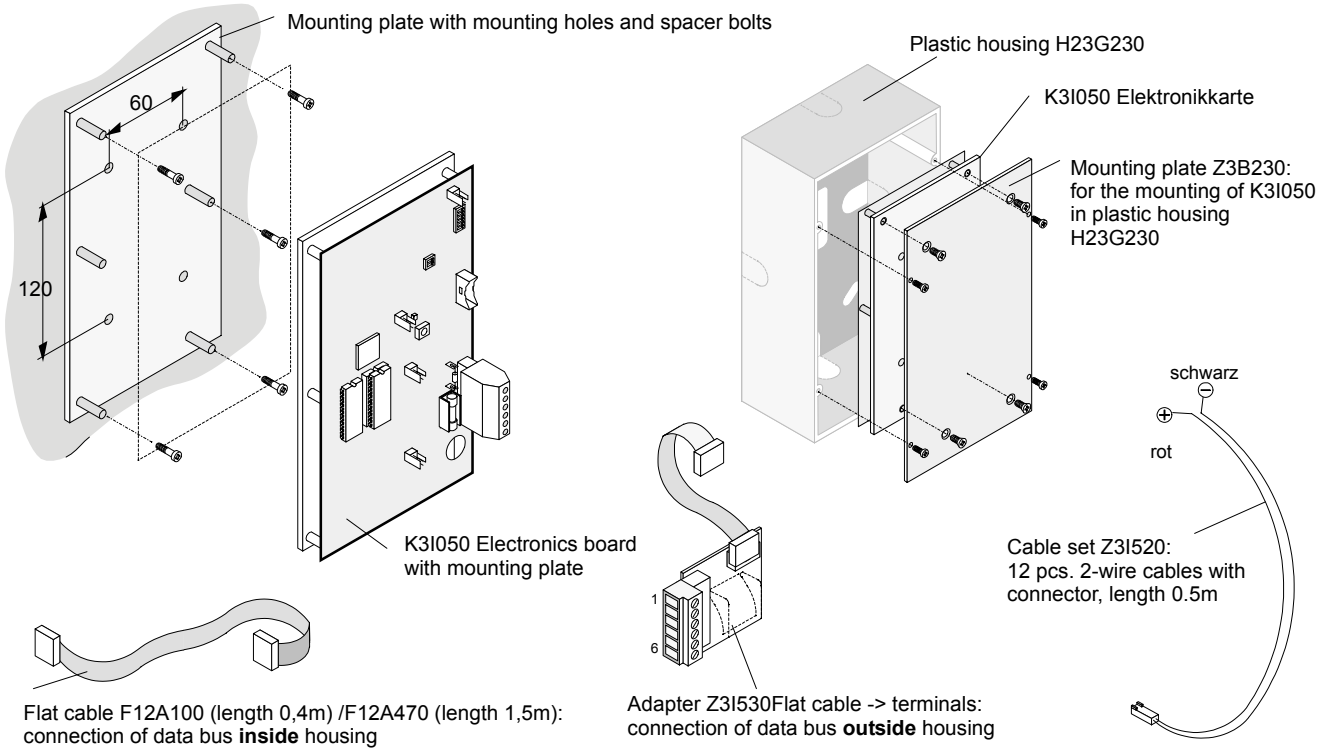

24.6 Important components

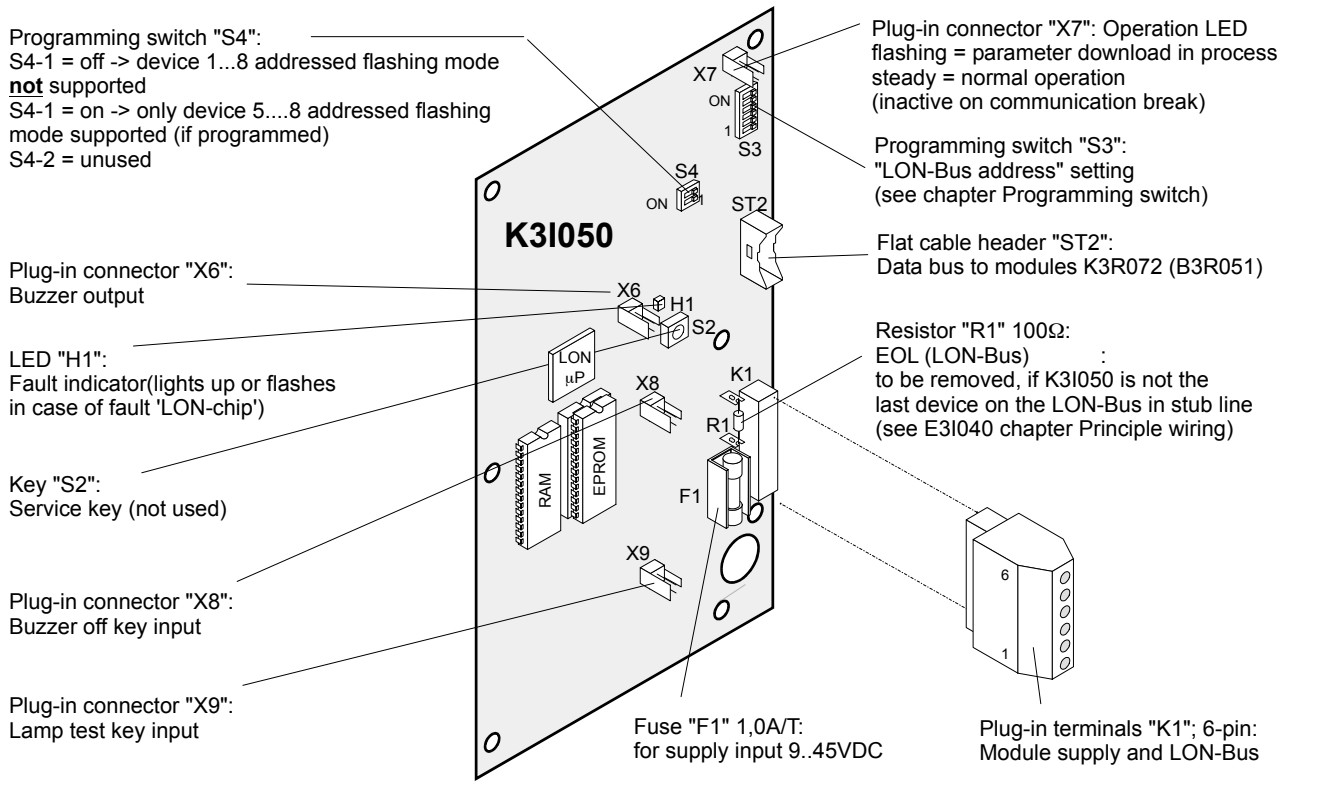

24.7 Programming switch ”S3”

To set LON-Bus address. Each element (module) connected to the LON-Bus must have an individual address (number). This is set on programming switch ”S3”. Maximum 32 LON-Bus devices.

Function / LON-Bus address		**Programming switch S3**					
No.		S3-1	S3-2	S3-3	S3-4	S3-5	S3-6
0	Module out of commission (not used)	off	off	off	off	off	off
1	LON-Bus device number 1	on	off	off	off	off	off
2	2	off	on	off	off	off	off
3	3	on	on	off	off	off	off
4	4	off	off	on	off	off	off
5	5	on	off	on	off	off	off
6	6	off	on	on	off	off	off
7	7	on	on	on	off	off	off
8	8	off	off	off	on	off	off
9	9	on	off	off	on	off	off
10	10	off	on	off	on	off	off
11	11	on	on	off	on	off	off
12	12	off	off	on	on	off	off
13	13	on	off	on	on	off	off
14	14	off	on	on	on	off	off
15	15	on	on	on	on	off	off
16	16	off	off	off	off	on	off
17	17	on	off	off	off	on	off
18	18	off	on	off	off	on	off
19	19	on	on	off	off	on	off
20	20	off	off	on	off	on	off
21	21	on	off	on	off	on	off
22	22	off	on	on	off	on	off
23	23	on	on	on	off	on	off
24	24	off	off	off	on	on	off
25	25	on	off	off	on	on	off
26	26	off	on	off	on	on	off
27	27	on	on	off	on	on	off
28	28	off	off	on	on	on	off
29	29	on	off	on	on	on	off
30	30	off	on	on	on	on	off
31	31	on	on	on	on	on	off
32	32	off	off	off	off	off	on

”S3-1...6” are set to ”off” at the factory

24.8 Connections

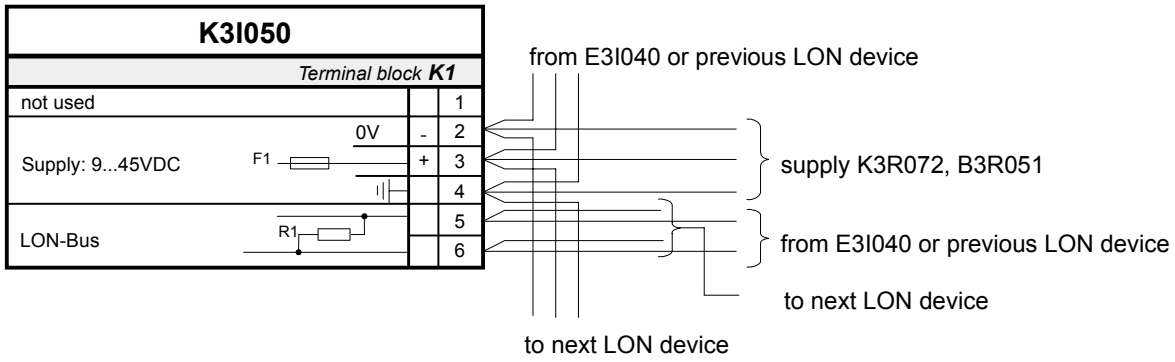

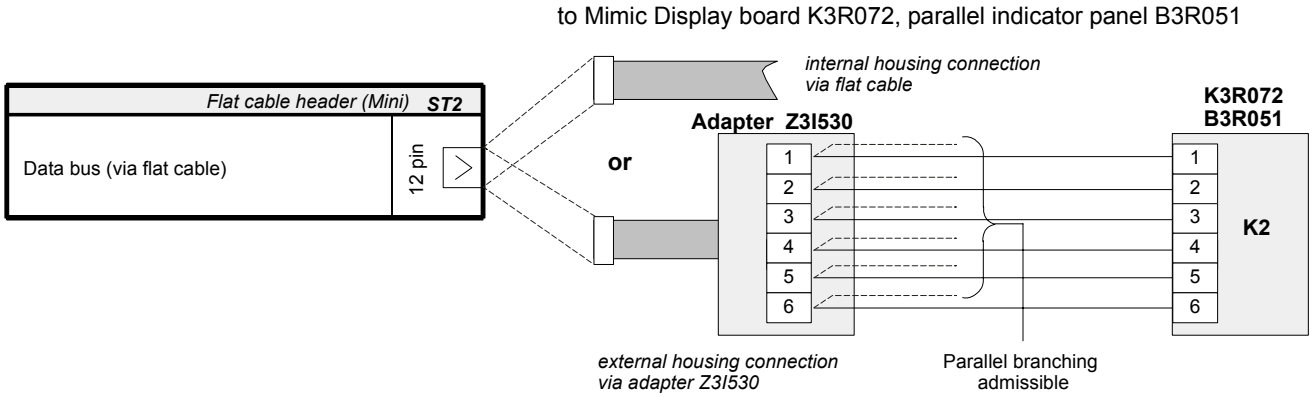

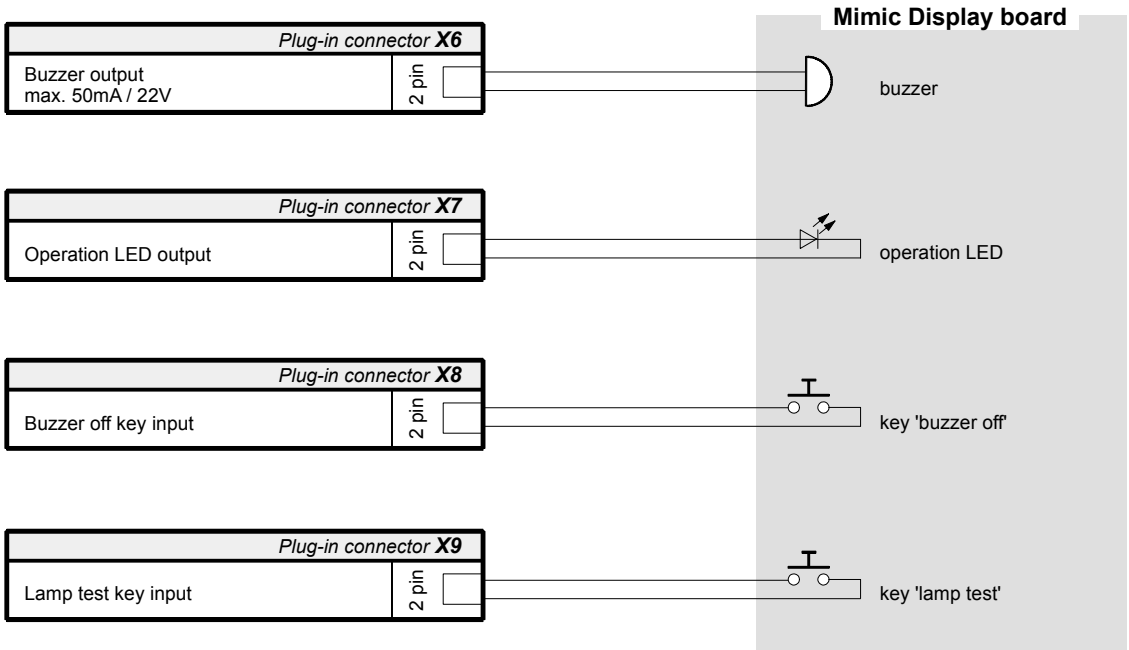

25 K3I110 LON I/O p.c.b.

25.1 Overview

- In-/output card with 16 programmable control in-/outputs
- LON-Bus device
- Max. 32 devices
- Selectable ground fault monitoring, detected via E3G070 (for application details see chapter 6)
- Card format 100mm x 200mm
- Equipped with mounting plate

25.2 Application

– The card communicates (LON-Bus) via converter module E3I040 (LON-/I-Bus) with the control unit.

25.3 Key data

Output contacts, NO		Outputs are galvanically isolated, not supervised on open circuit, short circuit or ground fault
Ratings relay contacts		max. 1A / 30VDC
Inputs		supervised on open circuit, short circuit, deviation and ground fault
Operating voltage		9...45VDC
Current consumption at	24V 9V 45V	min. 24mA / max. 184mA * min. 53mA / max. 218mA * min. 19mA / max. 171mA *
		per activated relay (at 24V) 10mA (without LED 9,2mA)
		per input with closed contact max. 0,5mA

* all relay activated incl. service LED

25.4 Wiring principle

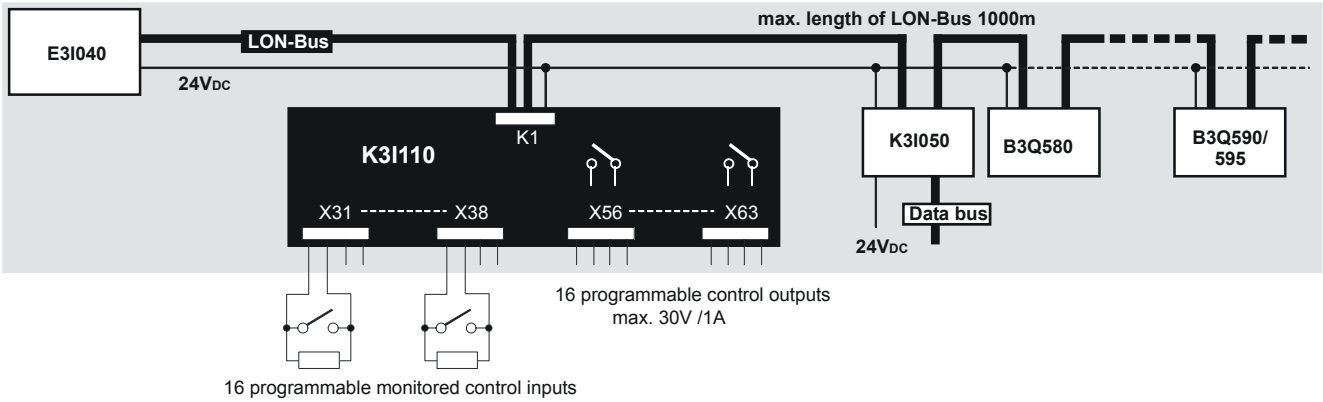

25.5 Mechanical design

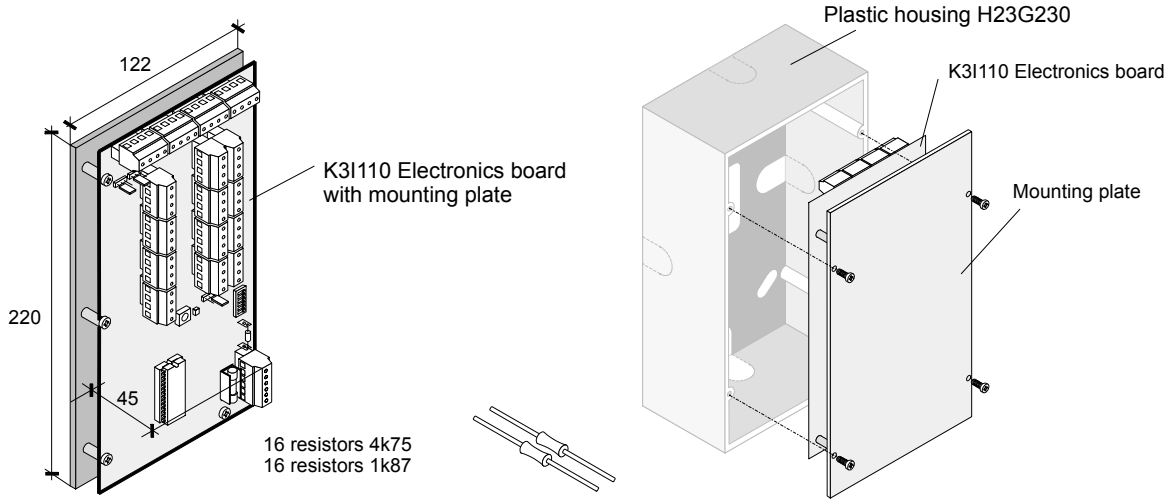

25.6 Important components

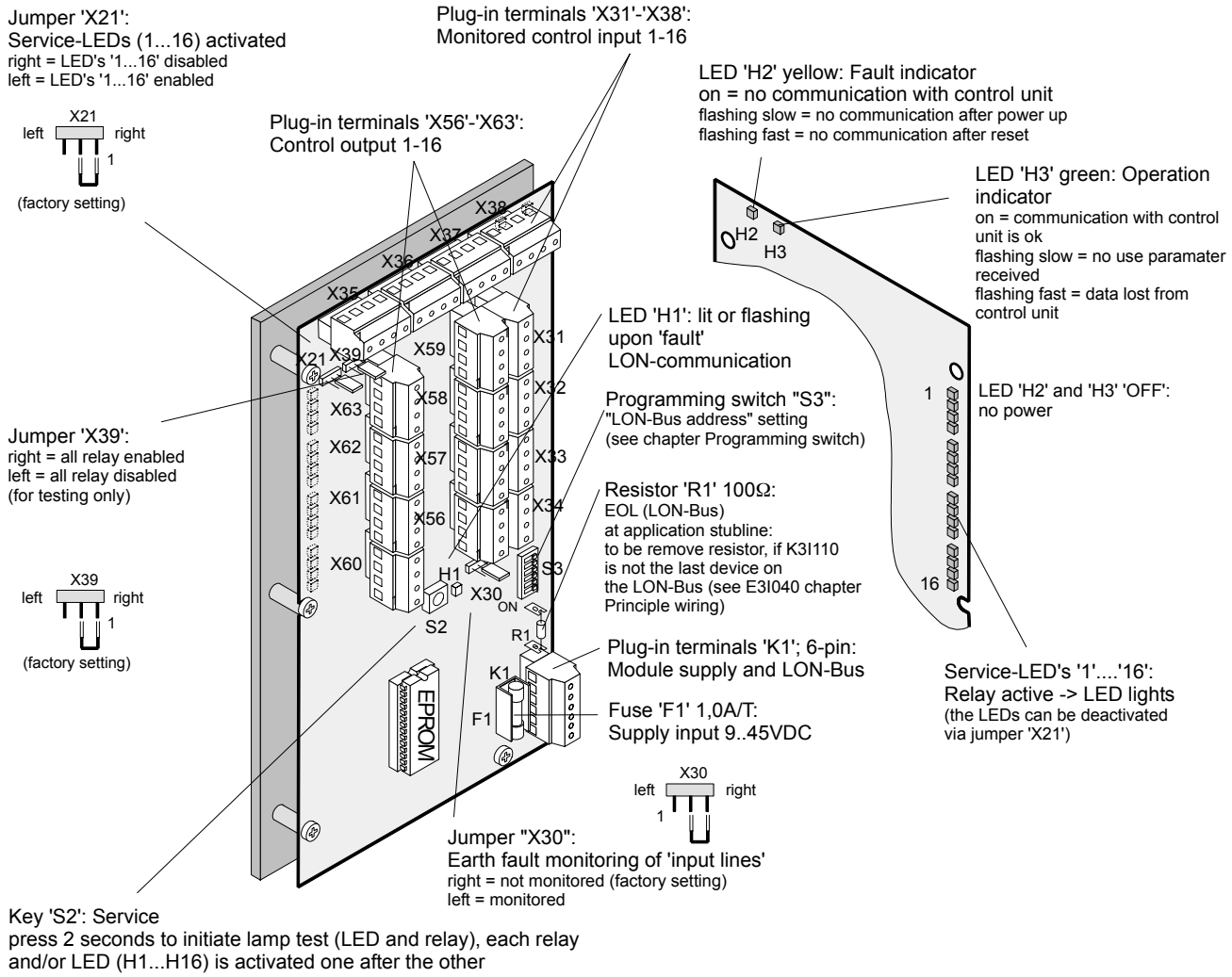

25.7 Programming switch ’S3’

Function / LON-Bus address		**Programming switch S3**					
No.		S3-1	S3-2	S3-3	S3-4	S3-5	S3-6
0	Module out of commission (not used)	off	off	off	off	off	off
1	LON-Bus device number 1	on	off	off	off	off	off
2	2	off	on	off	off	off	off
3	3	on	on	off	off	off	off
4	4	off	off	on	off	off	off
5	5	on	off	on	off	off	off
6	6	off	on	on	off	off	off
7	7	on	on	on	off	off	off
8	8	off	off	off	on	off	off
9	9	on	off	off	on	off	off
10	10	off	on	off	on	off	off
11	11	on	on	off	on	off	off
12	12	off	off	on	on	off	off
13	13	on	off	on	on	off	off
14	14	off	on	on	on	off	off
15	15	on	on	on	on	off	off
16	16	off	off	off	off	on	off
17	17	on	off	off	off	on	off
18	18	off	on	off	off	on	off
19	19	on	on	off	off	on	off
20	20	off	off	on	off	on	off
21	21	on	off	on	off	on	off
22	22	off	on	on	off	on	off
23	23	on	on	on	off	on	off
24	24	off	off	off	on	on	off
25	25	on	off	off	on	on	off
26	26	off	on	off	on	on	off
27	27	on	on	off	on	on	off
28	28	off	off	on	on	on	off
29	29	on	off	on	on	on	off
30	30	off	on	on	on	on	off
31	31	on	on	on	on	on	off
32	32	off	off	off	off	off	on

”S3-1...6” are set to ”off” at the factory

25.8 Connections

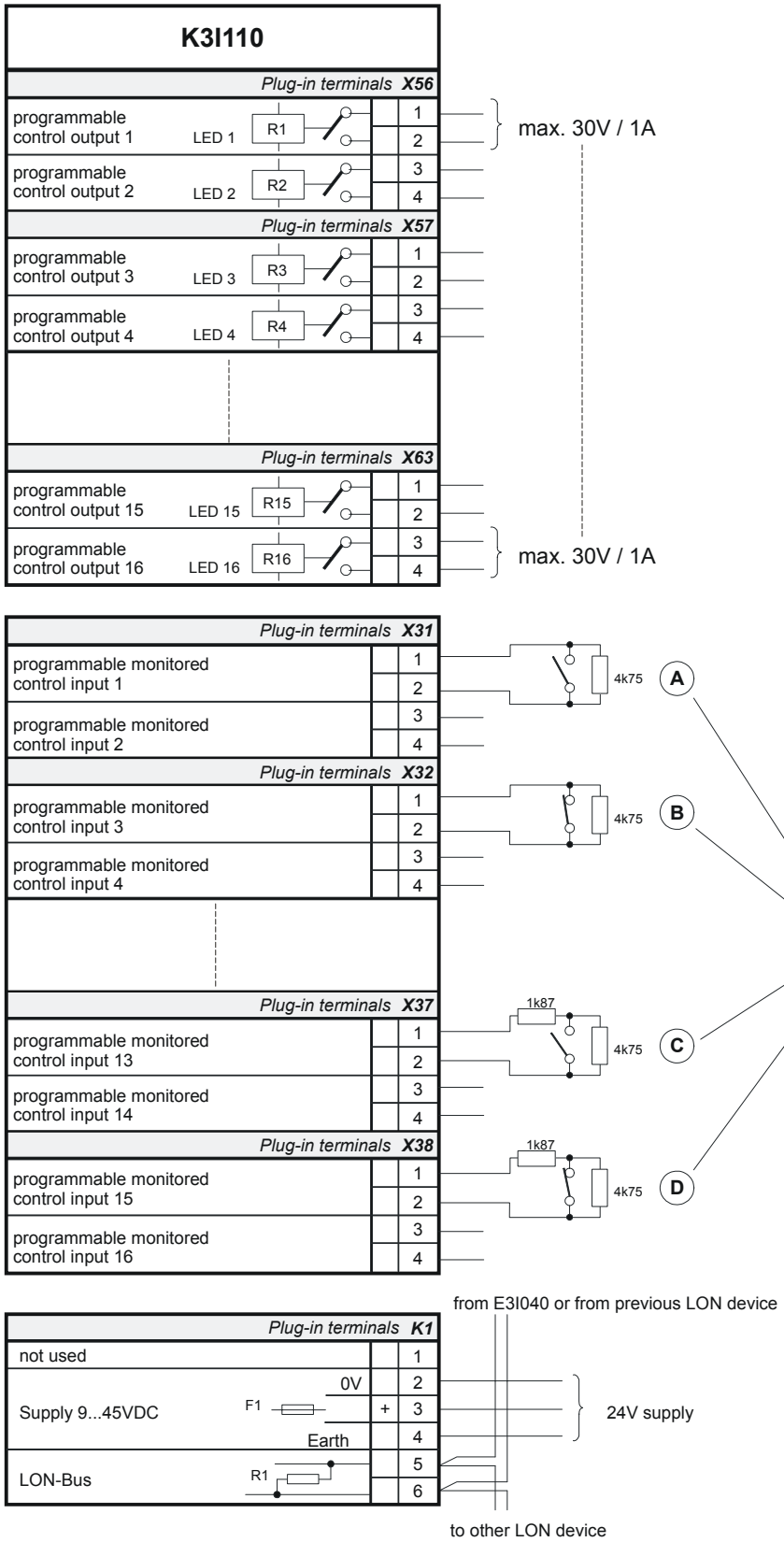

Connection of external contact

Application	Contact NO	Contact NC	Monitored on short circuit
A	X	—	—
B	—	X	—
C	X	—	X
D	—	X	X

26 B3Q580 Floor repeater panel and B3Q590/B3Q595 Floor repeater panel with control functions

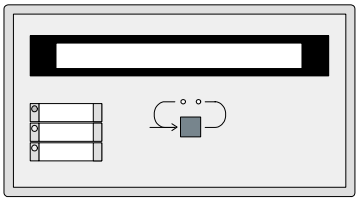

B3Q580

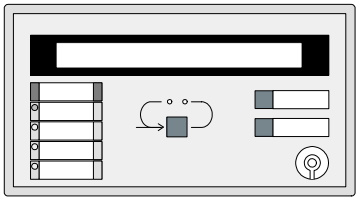

B3Q590
(with Nordic lock)

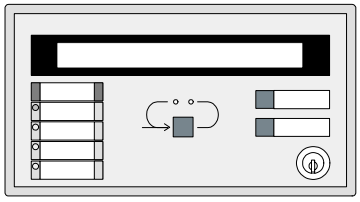

B3Q595
(as B3Q590 but with KABA lock)

26.1 Overview

- Small display and operating units (219 x 125 x 76mm)
- LON-Bus device
- Max. 32 units
- Recessed mounting available (see document no. 007830)

Function	**B3Q580** **Floor repeater panel**	**B3Q590 / B3Q595** **Floor repeater panel with control functions**
LCD 2x40 characters yellow backlight	✔	✔
Alarm event indication on LCD	all ZONES from 1...16 selectable SECTIONS from 1 selectable AREA -> for details see SWE700A Online-Help	all ZONES visible on the connected station -> for details see SWE700A Online-Help
Fault/Warning event indication on LCD	selectable (yes/no via SWE700A)	selectable (yes/no via SWE700A)
Selectable indicating mode	14 (selectable via SWE700A)	14 (selectable via SWE700A)
Buzzer, can be silenced	✔	✔
3 programmable LEDs	—	✔ yellow, exchangeable (1 green LED enclosed)
Function key 'message scrolling'	✔ (also serves to silence buzzer + lamp test)	✔ (also serves to silence buzzer + lamp test)
Function keys 'Acknowledge'/'Reset'	—	✔
Key switch for operating access	—	✔ B3Q590 = Nordic key ✔ B3Q595 = KABA key
For installation in housing H23G230	✔	✔
Slide-in inscription strips	✔ (various sets available) see document no. 007834	✔ (various sets available) see document no. 007834
Operating voltage	9... 45VDC	9... 45VDC
Supply voltage: Current consumption at: 24V quiescent (LCD backlight off) 24V max. 45V quiescent (LCD backlight off) 45V max. 9V quiescent (LCD backlight off) 9V max.	 20mA 180mA 18mA 90mA 50mA 480mA	 18mA 185mA 16mA 90mA 35mA 500mA

26.2 Application

B3Q580: Typical floor indication panel
B3Q590 / B3Q595: Secondary indication and operating panel

26.3 Mechanical design

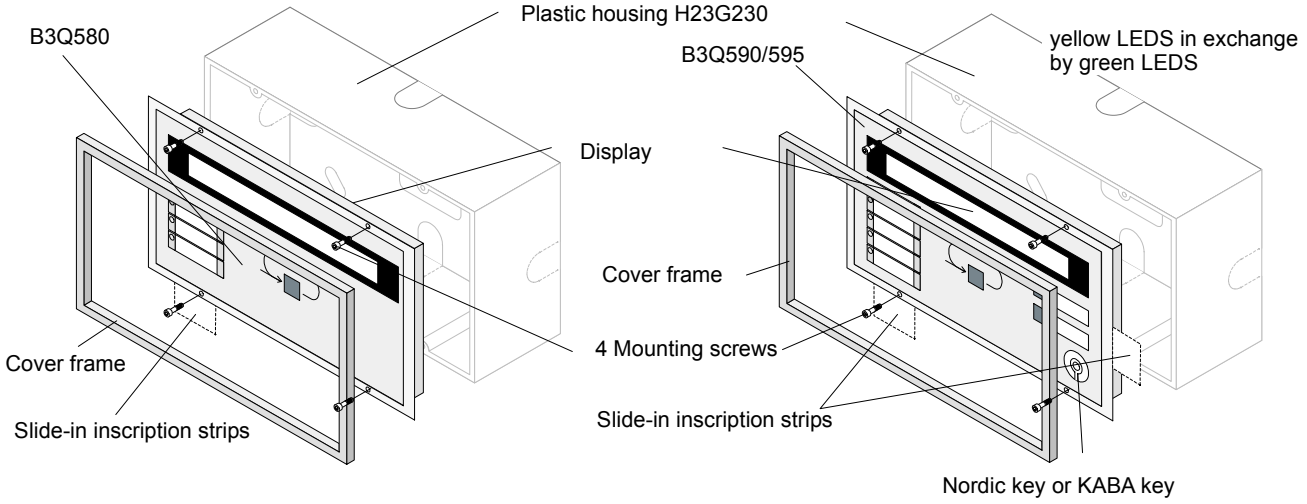

26.4 Important components B3Q580, B3Q590, B3Q595

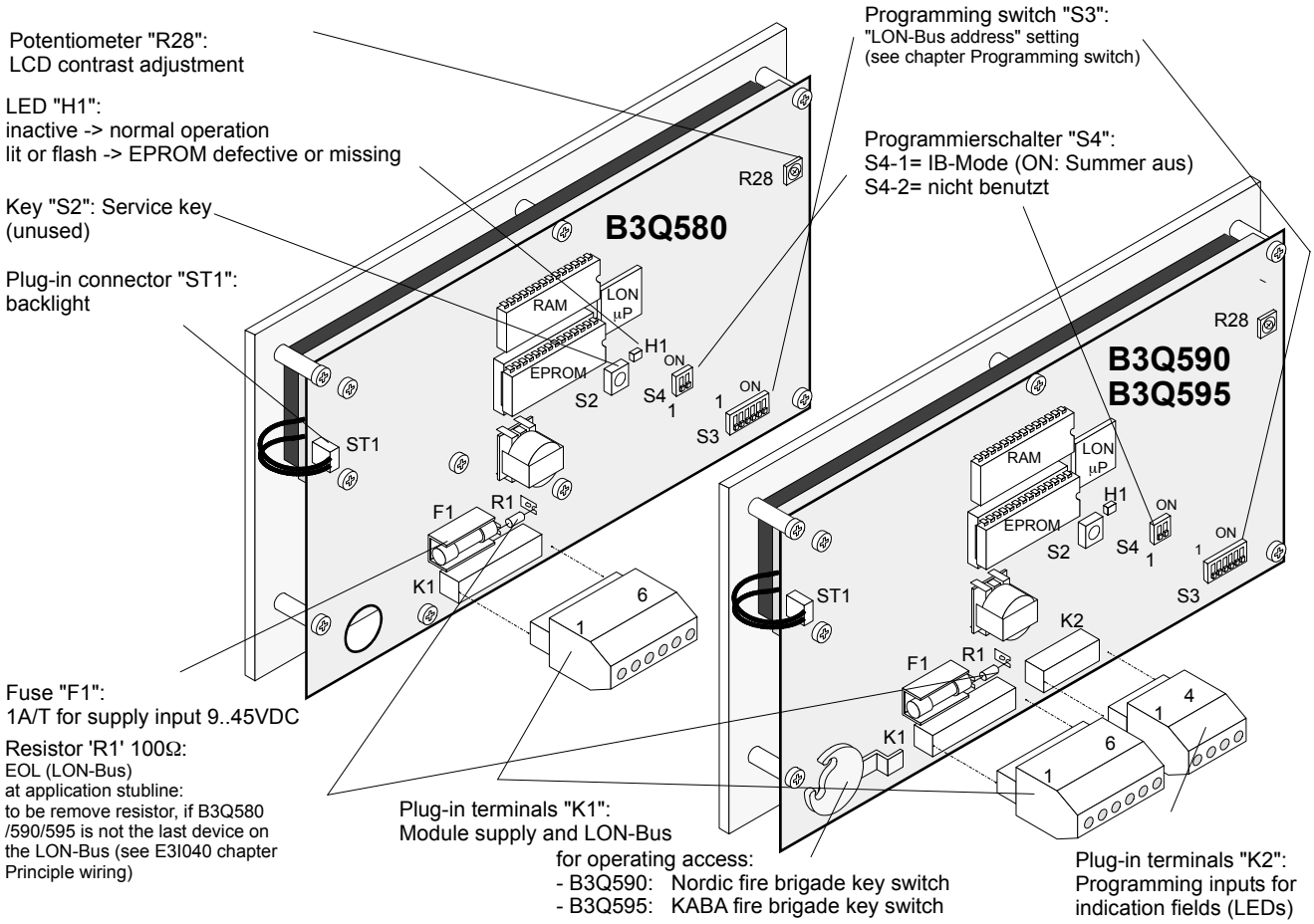

26.5 Programming switch ”S3”

To set LON-Bus address. Each element (module) connected to the LON-Bus must have an individual address (number). This is set on programming switch ”S3”. Maximum 32 LON-Bus devices.

Function / LON-Bus address		**Programming switch S3**					
No.		S3-1	S3-2	S3-3	S3-4	S3-5	S3-6
0	Module out of commission (not used)	off	off	off	off	off	off
1	LON-Bus device number 1	on	off	off	off	off	off
2	2	off	on	off	off	off	off
3	3	on	on	off	off	off	off
4	4	off	off	on	off	off	off
5	5	on	off	on	off	off	off
6	6	off	on	on	off	off	off
7	7	on	on	on	off	off	off
8	8	off	off	off	on	off	off
9	9	on	off	off	on	off	off
10	10	off	on	off	on	off	off
11	11	on	on	off	on	off	off
12	12	off	off	on	on	off	off
13	13	on	off	on	on	off	off
14	14	off	on	on	on	off	off
15	15	on	on	on	on	off	off
16	16	off	off	off	off	on	off
17	17	on	off	off	off	on	off
18	18	off	on	off	off	on	off
19	19	on	on	off	off	on	off
20	20	off	off	on	off	on	off
21	21	on	off	on	off	on	off
22	22	off	on	on	off	on	off
23	23	on	on	on	off	on	off
24	24	off	off	off	on	on	off
25	25	on	off	off	on	on	off
26	26	off	on	off	on	on	off
27	27	on	on	off	on	on	off
28	28	off	off	on	on	on	off
29	29	on	off	on	on	on	off
30	30	off	on	on	on	on	off
31	31	on	on	on	on	on	off
32	32	off	off	off	off	off	on

”S3-1...6” are set to ”off” at the factory

26.6 Message presentation

The B3Q700 provides 3 text lines within the LCD per alarm message. B3Q580 and B3Q590/B3Q595 only have a two-line display. The messages at the B3Q580/590/595 must therefore be reduced to a format of only 2 text lines in order to meet different requirements. There are **14 display modes** available (mode 0...13 selectable via SWE700A).

Mode	Display B3Q580/590/595	Plan ref. no. on alarm	CSX no.	Fault messages
0	nn%<---------- standard text ----------> <---- last line of customer text --->			
1				●
2	nn%<---- standard text -----> <-tx1->xxx <---- last line of customer text --->	●		
3		●		●
4	nn%<---------- standard text ----------> AAAA xx SSSS xxx ZZZZ xxx EEEE xx		●	
5			●	●
6	nn%<---- standard text -----> <-tx1->xxx AAAA xx SSSS xxx ZZZZ xxx EEEE xx	●	●	
7		●	●	●
8	nn%<--------- customer text 1 ---------> <--------- customer text 2 --------->			
9				●
10	nn%<--- customer text 1 ----> <-tx1->xxx <--------- customer text 2 --------->	●		
11		●		●
12	nn%<--------- customer text 1 ---------> <--------- customer text 2 --------->	Special function: – key acknowledge + reset disabled while remote transmission (RT) is active – buzzer silenced when RT becomes active		
13 A	nn%<--- customer text 1 ----> <-tx1->xxx <--------- customer text 2 --------->	Special function: – different display mode A = on alarm B = on fault		
13 B	nn%<--------- customer text 1 ---------> <--------- customer text 2 --------->			

26.7 Country specific configuration data

Supported character set

- ASCII (...127) + 8 individual characters defined per country
- Supports most European languages, Hebrew and Cyrillic are explicitly excluded

Local configuration

- All national configuration data is locally available (EPROM in B3Q580/590/595)
- The required parameters are selected by 'country code' which is received with each 'system start-up' and after each local 'power down'

Parameters

- 8 defined national characters
- National standard texts for 'local mode' during communication break
- Format for date and time display

```
   1234567890123456789012345678901234567890
A: *** powering up ***
B: *** resetting ***
C: waiting for initialization
```

Switzerland German:

```
   1234567890123456789012345678901234567890
1: Normalbetrieb
2: Daten verloren
3: Verbindung unterbrochen seit
4: GR.NR.
5: Ber. Abs. Obj. Elem
6: Feuerwehraufgebot in
Date format:   31.12.2000
Time format:     23:59
National characters:  ƒ ‰ ÷ ˆ ‹ ¸ fl ¯ ß \ °
```

Switzerland French:

```
   1234567890123456789012345678901234567890
1: En service
2: DonnÈes pÈrdues
3: Communicat.interrompue depuis
4: Gr.No.
5: Site Sect Zone ElÈm
6: Transmission dans
Date format:   31.12.2000
Time format:     23:59
National characters:  ‡ , Á È Ë Í Ó ˜ \ °
```

Switzerland Italian:

```
   1234567890123456789012345678901234567890
1: Funzionamento normale
2: Perdita dati
3: Comunicazione interrotta per
4: NR.GR.
5: Area Sez. Zona Elem
6: Interv. Pompieri in
Date format:   31.12.2000
Time format:     23:59
National characters:  ‡ Á È Ë Ï Ú ˜ \ °
```

Sweden:

```
   1234567890123456789012345678901234567890
1: Normal drift
2: Data fˆrlorad
3: Fˆrbindelse avbruten i
4: OR :
5: Omr: Sek: Zon: El:
6: Larmˆverfˆring om
Date format:   2000-12-31
Time format:     23.59
National characters:  ƒ ‰ ÷ ˆ ‹ ¸ ≈ Â È § \
```

Norway:

```
   1234567890123456789012345678901234567890
1: Normal drift
2: data gÂtt tapt
3: Kommunikasjonen opprettes om
4: Kort n.
5: Omr. Sek. Sone El.
6: Alarmoverf¯ring aktiv om
Date format:   31.12.2000
Time format:     23:59
National characters:  ∅ ¯ ∆ Ê ≈ Â \ ° ~
```

Finland:

```
   1234567890123456789012345678901234567890
1: Normaali k‰yttˆ
2: data h‰vinnyt
3: Yhteys katkennut
4: Sivu:
5: Alue Taso Ryh. Os.
6: Pelastuslaitos kutsutaan
Date format:   31.12.2000
Time format:     23.59
National characters:  ƒ ‰ ÷ ˆ ‹ ¸ ≈ Â È § \
```

Denmark:

```
   12345678901234567890123456789012345678 90
1: Normal drift
2: data tabt
3: Forbindelse afbrudt i
4: Plan:
5: Area Sect Zone Elem
6: Signaloverf¯ring om
Date format:   31.12.2000
Time format:     23:59
National characters:  ∅ ¯ Δ Ê ≈ Â \ ° ~
```

Netherlands:

```
   12345678901234567890123456789012345678 90
1: Normaal bedrijf
2: data verloren
3: Verbinding verbroken voor
4: Plan:
5: Geb. Zone Groep Elem
6: Doormelding over
Date format:   31.12.2000
Time format:     23.59
National characters:  £ \ ~
```

Belgium French / Luxembourg:

```
   12345678901234567890123456789012345678 90
1: En fonction normale
2: perte donnÈs
3: Communication interrompue
4: Plan:
5: Site Sect Zone Elem
6: TÈlÈtransmission dans
Date format:   31/12/2000
Time format:     23:59
National characters:  ‡ , Á È Ë Í Ó ˜ \ °
```

Spain:

```
   12345678901234567890123456789012345678 90
1: En servicio
2: PÈrdida d.datos
3: ConexiÛn interrumpida durante
4: Plano:
5: Area Secc Zona Elem
6: Transmi. a distancia en
Date format:   31 12 2000
Time format:     23:59
National characters:  — Ò È Û ˙ ° ø \ ~
```

Portugal:

```
   12345678901234567890123456789012345678 90
1: OperaÃ„o normal
2: dados perdidos
3: LigaÃ„o interrompida por
4: Plano
5: ¡rea SecÃ Zona Elem
6: Transmiss„o dist,ncia em
Date format:   2000-12-31
Time format:     23:59
National characters:  ¡ „ , Á ’ ı \ ò
```

Hungary:

```
   12345678901234567890123456789012345678 90
1: norm□l ¸zem
2: adatvesztÈs
3: kapcsolatszakad□s
4: rajz:
5: Ter¸ Szek ZÛna Elem
6: t□vjelzÈs indul
Date format:   2000/12/31
Time format:     23:59
National characters:  □ È Ì ° ¸ ı Û ˆ \ ~
```

Germany:

```
   12345678901234567890123456789012345678 90
1: Normalbetrieb
2: Daten verloren
3: Verbindung unterbrochen seit
4: Plan:
5: Ber. Abs. Obj. Elem
6: Ansteuerung ‹E in
Date format:   31.12.2000
Time format:     23:59
National characters:  ƒ ‰ ÷ ˆ ‹ ¸ fl ¯ ß \ °
```

France:

```
   12345678901234567890123456789012345678 90
1: SystËme en veille
2: Perte donnÈes
3: Connexion interrompue depuis
4: Plan:
5: Site Sect Zone ElÈm
6: Transmission alarme dans
Date format:   31.12.2000
Time format:     23:59
National characters:  ‡ , Á È Ë Í Ó ˜ \ °
```

Belgium Flemish:

```
   12345678901234567890123456789012345678 90
1: Normale werking
2: data verloren
3: Communicatie verbroken
4: Plan:
5: Area Sect Zone Elem
6: Teletransmissie binnen
Date format:   31/12/2000
Time format:     23:59
National characters:  ‡ ‰ È Ë Î Ô ˆ ¸ °
```

Catalan:

```
   12345678901234567890123456789012345678 90
1: En servei
2: perdua de dades
3: ConnexiÛ aturada per
4: Planol:
5: Area Secc Zona Elem
6: transmissio remote activ.
Date format:   31 12 2000
Time format:     23:59
National characters:  — Ò È Û ˙ « Á \ °
```

Italy:

```
   12345678901234567890123456789012345678 90
1: Funzionamento normale
2: dato perso
3: Collegamento interrotto per
4: Disegn.
5: Area Sez. Zona Elem
6: Teletrasmissione in
Date format:   31.12.2000
Time format:     23:59
National characters:  ‡ Á È Ë Ï Ú ˜ \ °
```

Czech Republic:

```
   12345678901234567890123456789012345678 90
1: NORMALNI PROVOZ
2: STRATA DAT
3: SPOJENI JE PRERUSENO JIZ
4: PLAN:
5: AREA SEKC ZONA ELEM
6: DALKOVY PRENOS ZA
Date format:   31.12.2000
Time format:     23:59
National characters:  Ë Ï Ú ∅ ¯ š ý □ \ °
```

Slovakia:

```
   12345678901234567890123456789012345678 90
1: Norm□lna prev□dzka
2: D□ta stratenÈ
3: Spojenie prerušenÈ o
4: Pl□n:
5: obl. ˙sek zÛna elem
6: Dialkový prenos o
Date format:   31.12.2000
Time format:     23:59
National characters:  □ ‰ È Ì Û š ˙ ý \
```

English international:

```
   12345678901234567890123456789012345678 90
1: Normal operation
2: data lost
3: Connection interrupted for
4: Plan:
5: Area Sect Zone Elem
6: remote transmission in
Date format:   31-12-2000
Time format:     23:59
National characters:  £ \ ~
```

England:

```
   12345678901234567890123456789012345678 90
1: Normal operation
2: data lost
3: Connection interrupted for
4: Zone:
5: Area Sect Zone Elem
6: General alarm in
Date format:   31-12-2000
Time format:     23:59
National characters:  £ \ ~
```

Poland:

```
   12345678901234567890123456789012345678 90
1: DZIALANIE NORMALNE
2: BRAK DANYCH
3: BRAK POLACZENIA PRZEZ
4: PLAN
5: OBSZ SEKC STRE ELEM
6: ZDALNA TRANSMISJA PO
Date format:   31-12-2000
Time format:     23:59
National characters:  ¹ Ê Í Ò Û ú þ ø \ °
```

USA:

```
   12345678901234567890123456789012345678 90
1: Normal operation
2: data lost
3: Connection interrupted for
4: Plan:
5: Area Sect Zone Elem
6: remote transmission in
Date format:   12/31/2000
Time format:     11:59 PM
National characters:  £ \ ~
```

Iceland: in capital letters !

```
   12345678901234567890123456789012345678 90
1: EÐLILEG STAÐA
2: G÷GN GL÷TUÐ
3: SAMBAND ROFIÐ Õ
4: PLAN:
5: HEIL HLUT SVÆÐ EINI
6: FJARSENDING VIRK EFTIR
Date format:   31-12-2000
Time format:     23:59
National characters:  ¡ Æ Ð … Õ ″ ÷ ⁄ Ý Þ \ °
```

26.8 Connections B3Q580

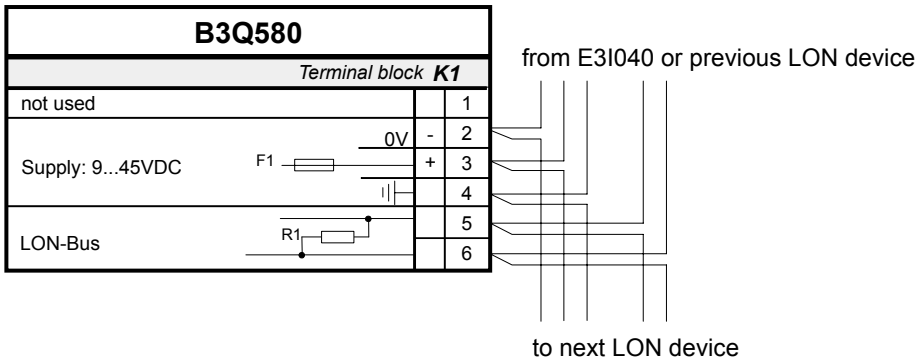

26.9 Connections B3Q590/B3Q595

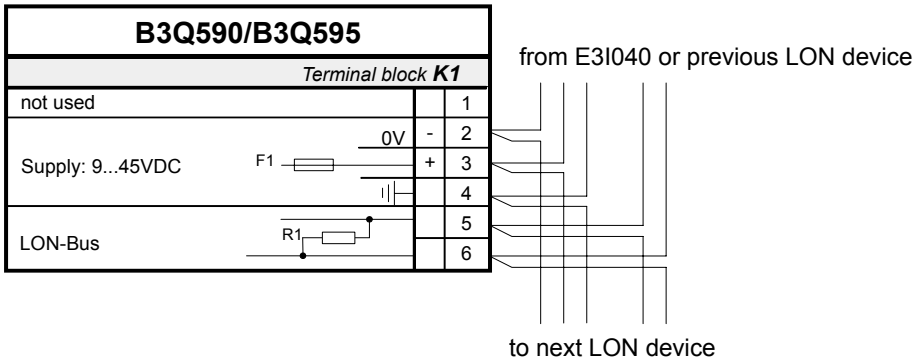

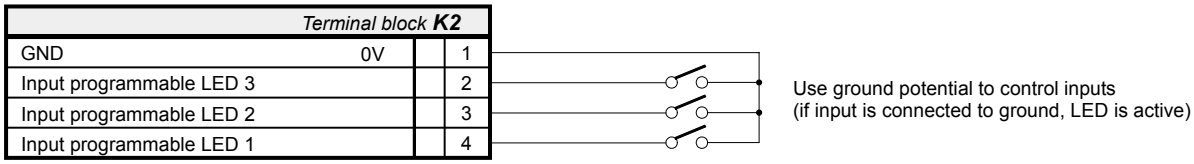

Siemens Building Technologies AG
Alte Landstr. 411
CH-8708 Männedorf
Tel. +41 1 - 922 6111
Fax +41 1 - 922 6450
www.sibt.com